US Department of Transportation
Federal Aviation Administration

MAJOR REPAIR AND ALTERATION
(Airframe, Powerplant, Propeller, or Appliance)

OMB No. 2120-0020
Exp: 5/31/2018

Electronic Tracking Number

For FAA Use Only

INSTRUCTIONS: Print or type all entries. See Title 14 CFR §43.9, Part 43 Appendix B, and AC 43.9-1 (or subsequent revision thereof) for instructions and disposition of this form. This report is required by law (49 U.S.C. §44701). Failure to report can result in a civil penalty for each such violation. (49 U.S.C. §46301(a))

1. Aircraft	Nationality and Registration Mark: N180MS	Serial No.: 18052551	
	Make: CESSNA	Model: 180J	Series:
2. Owner	Name *(As shown on registration certificate)*: 180 AIRWAYS LLC	Address *(As shown on registration certificate)*: Address 854A CENTRE ST; City RIDGELAND; State MS; Zip 39157-4515; Country USA	

3. For FAA Use Only

4. Type		5. Unit Identification			
Repair	Alteration	Unit	Make	Model	Serial No.
☐	☒	AIRFRAME	CESSNA	*(As described in Item 1 above)*	18052551
☐	☐	POWERPLANT			
☐	☐	PROPELLER			
☐	☐	APPLIANCE	Type / Manufacturer		

6. Conformity Statement

A. Agency's Name and Address	B. Kind of Agency	
Name: DAVID C. ENTREKIN	X U. S. Certificated Mechanic	☐ Manufacturer
Address: 108 PERSIMMON	☐ Foreign Certificated Mechanic	C. Certificate No.
City: RIDGELAND State: MS	☐ Certificated Repair Station	3398557
Zip: 39110 Country: USA	☐ Certificated Maintenance Organization	

D. I certify that the repair and/or alteration made to the unit(s) identified in item 5 above and described on the reverse or attachments hereto have been made in accordance with the requirements of Part 43 of the U.S. Federal Aviation Regulations and that the information furnished herein is true and correct to the best of my knowledge.

Extended range fuel per 14 CFR Part 43 App. B ☐

Signature/Date of Authorized Individual: 25 JULY 2019

7. Approval for Return to Service

Pursuant to the authority given persons specified below, the unit identified in item 5 was inspected in the manner prescribed by the Administrator of the Federal Aviation Administration and is ☒ Approved ☐ Rejected

BY								
	☐	FAA Flt. Standards Inspector	☐	Manufacturer	☐	Maintenance Organization	☐	Persons Approved by Canadian Department of Transport
	☐	FAA Designee	☐	Repair Station	X	Inspection Authorization		Other *(Specify)*

Certificate or Designation No. 3398557

Signature/Date of Authorized Individual: 25 JUL 2019

FAA Form 337 (10/06)

NOTICE

Weight and balance or operating limitation changes shall be entered in the appropriate aircraft record. An alteration must be compatible with all previous alterations to assure continued conformity with the applicable airworthiness requirements.

8. Description of Work Accomplished

(If more space is required, attach additional sheets. Identify with aircraft nationality and registration mark and date work completed.)

N180MS — 25 JUL 2019

Nationality and Registration Mark — Date

Installed new left fuel cell aft fuel screen pn BAR0720007-7 in accordance with FAA STC SA02221AK issuance date November 29, 2004. Front page of STC showing installation authorization from STC owner Burl's Aircraft Rebuild attached.

[✓] Additional Sheets Are Attached

United States Of America

Department of Transportation - Federal Aviation Administration

Supplemental Type Certificate

Number SA02221AK

180 AIRWAYS LLC IS HE
AUTHORIZED TO INSTALL STC SA02221AK
ON A CESSNA MODEL 180J
N 180MS
S/N 18052551
AUTHORIZED BY BURL A. ROGERS, HOLDER
STC SA02221AK
SIGNATURE Burl A Rogers
(SIGNATURE MUST BE SIGNED IN GREEN INK /
BE ACCOMPANIED WITH RAISED COMPANY SI

This Certificate issued to Burl's Aircraft Rebuild
P.O. Box 671487
Chugiak, AK 99567

certifies that the change in the type design for the following product with the limitations and conditions therefor as specified hereon meets the airworthiness requirements of Part 3 *of the* Civil Air *Regulations.*

Original Product Type Certificate Number

Make :
Model :

*See attached FAA Approved Model List (AML) No. SA02221AK, dated November 26, 2004, list of approved airplane models and applicable airworthiness regulations

Description of Type Design Change: Installation of Alternate Fuel outlet Screens per Installation Instructions and Instructions for Continued Airworthiness BAR0720007D Revision Original Issue dated November 26, 2004 or later FAA approved revision.

Limitations and Conditions:

1. Compatibility of this design change with previously approved modifications must be determined by the installer.

3. For Instructions for Continued Airworthiness, refer to Document BAR0720007D revision Original Issue Dated November 26, 2004, or later FAA approved revision.

4. If the holder agrees to permit another person to use this certificate to alter the product, the holder shall give the other person written evidence of that permission.

This certificate and the supporting data which is the basis for approval shall remain in effect until surrendered, suspended, revoked or a termination date is otherwise established by the Administrator of the Federal Aviation Administration.

Date of application : September 26, 2003

Date of issuance : November 26, 2004

Date reissued :

Date amended :

By direction of the Administrator

(Signature)

Gregory J. Holt
Manager
Anchorage Aircraft Certification Office

(Title)

Any alteration of this certificate is punishable by a fine of not exceeding $1,000, or imprisonment not exceeding 3 years, or both.

This certificate may be transferred in accordance with FAR 21.47.

US Department of Transportation
Federal Aviation Administration

MAJOR REPAIR AND ALTERATION
(Airframe, Powerplant, Propeller, or Appliance)

Form Approved OMB No. 2120-0020 2/28/2011

Electronic Tracking Number

For FAA Use Only

INSTRUCTIONS: Print or type all entries. See Title 14 CFR §43.9, Part 43 Appendix B, and AC 43.9-1 (or subsequent revision thereof) for instructions and disposition of this form. This report is required by law (49 U.S.C. §44701). Failure to report can result in a civil penalty for each such violation. (49 U.S.C. §46301(a))

1. Aircraft	Nationality and Registration Mark N180MS	Serial No. 18052551	
	Make Cessna	Model 180J	Series Skywagon
2. Owner	Name *(As shown on registration certificate)* 180 Airways, LLC	Address *(As shown on registration certificate)* Address 854A Centre St City Ridgeland State MS Zip 39157 Country USA	

3. For FAA Use Only

4. Type		5. Unit Identification			
Repair	Alteration	Unit	Make	Model	Serial No.
☐	☑	AIRFRAME	—	*(As described in Item 1 above)*	—
☐	☐	POWERPLANT			
☐	☐	PROPELLER			
☐	☐	APPLIANCE	Type Manufacturer		

6. Conformity Statement

A. Agency's Name and Address	B. Kind of Agency	
Name Timothy Lee Dearman	☑ U. S. Certificated Mechanic	☐ Manufacturer
Address 12 Louis Ingram Rd	☐ Foreign Certificated Mechanic	C. Certificate No.
City Seminary State MS	☐ Certificated Repair Station	A&P3714464
Zip 39479 Country USA	☐ Certificated Maintenance Organization	

D. I certify that the repair and/or alteration made to the unit(s) identified in item 5 above and described on the reverse or attachments hereto have been made in accordance with the requirements of Part 43 of the U.S. Federal Aviation Regulations and that the information furnished herein is true and correct to the best of my knowledge.

Extended range fuel per 14 CFR Part 43 App. B ☐	Signature/Date of Authorized Individual 10-20-2015 Timothy L. Dearman Timothy L. Dearman

7. Approval for Return to Service

Pursuant to the authority given persons specified below, the unit identified in item 5 was inspected in the manner prescribed by the Administrator of the Federal Aviation Administration and is ☐ Approved ☐ Rejected

BY								
	☐	FAA Flt. Standards Inspector	☐	Manufacturer	☐	Maintenance Organization	☐	Persons Approved by Canadian Department of Transport
	☐	FAA Designee	☐	Repair Station	X	Inspection Authorization		Other *(Specify)*

Certificate or Designation No. 3633839	Signature/Date of Authorized Individual 10-20-2015 Jerry L. Miller

NOTICE

Weight and balance or operating limitation changes shall be entered in the appropriate aircraft record. An alteration must be compatible with all previous alterations to assure continued conformity with the applicable airworthiness requirements.

8. Description of Work Accomplished
(If more space is required, attach additional sheets. Identify with aircraft nationality and registration mark and date work completed.)

N180MS	10-20-2015
Nationality and Registration Mark	Date

Installed door steward gas spring door assist alteration on left hand and right hand cabin doors in accordance with FAA approved supplemental type certificate SA01120SE. Weight change negligible. Equipment list updated. STC instructions for continued airworthiness added to aircraft records.

ATA Chapter 05 Time limits/maintenance checks

05-00 General

The door steward installation should be inspected during scheduled airframe periodic inspections that cover the door and door frame areas.

05-20 Scheduled Maintenance

Inspection of the installation will consist of the following:
1. Security of attachment of both airframe and door brackets to the associated structure.
2. Security of the gas spring attachment to the ball studs.
3. Security of the ball stud ti the airframe and door brackets.
4. Smooth operation of the gas spring. Inspect for evidence of end seal leakage of loss of gas spring pressure.

END

☐ Additional Sheets Are Attached

United States of America

Department of Transportation—Federal Aviation Administration

Supplemental Type Certificate

Number SA01120SE

This certificate, issued to AP Enterprises, LLC
DBA Mountain View Aviation
PO Box 31
Hubbard, OR 97032

*certifies that the change in the type design for the following product with the limitations and conditions therefor as specified hereon meets the airworthiness requirements of Part * of the * Regulations.*

Original Product—Type Certificate Number: *See attached FAA Approved Model List (AML)
Make: No. SA01120SE for list of approved airplane
Model: models and applicable airworthiness regulations.

Description of the Type Design Change: Installation of Door Steward in accordance with drawings listed on Approved Model List SA01120SE, dated September 9, 2002, or later FAA approved revision.

Limitations and Conditions: Approval of this change in type design applies to the airplane models listed on the AML only. This approval should not be extended to other aircraft of these models on which other previously approved modifications are incorporated unless it is determined that the relationship between this change and any of those other previously approved modifications, including changes in type design, will introduce no adverse effect upon the airworthiness of that aircraft. A copy of this certificate and FAA Approved Model List (AML) No. SA01120SE must be maintained as part of the permanent records for the modified aircraft.

If the holder agrees to permit another person to use this certificate to alter the product, the holder shall give the other person written evidence of that permission.

This certificate and the supporting data which is the basis for approval shall remain in effect until surrendered, suspended, revoked, or a termination date is otherwise established by the Administrator of the Federal Aviation Administration.

Date of application: June 17, 2002 *Date reissued:*

Date of issuance: September 9, 2002 *Date amended:*

By direction of the Administrator

(Signature)

Acting Manager, Seattle Aircraft Certification Office

(Title)

Any alteration of this certificate is punishable by a fine of not exceeding $1,000, or imprisonment not exceeding 3 years, or both.

This certificate may be transferred in accordance with FAR 21.47.

FAA Form 8110-2(10-68)

UNITED STATES OF AMERICA

DEPARTMENT OF TRANSPORTATION-FEDERAL AVIATION ADMINISTRATION

STANDARD AIRWORTHINESS CERTIFICATE

1 NATIONALITY AND REGISTRATION MARKS	2 MANUFACTURER AND MODEL	3 AIRCRAFT SERIAL NUMBER	4 CATEGORY
N180MS	CESSNA 180J	18052551	NORMAL

5 AUTHORITY AND BASIS FOR ISSUANCE

This airworthiness certificate is issued pursuant to the Federal Aviation Act of 1958 and certifies that, as of the date of issuance, the aircraft to which issued has been inspected and found to conform to the type certificate therefor, to be in condition for safe operation, and has been shown to meet the requirements of the applicable comprehensive and detailed airworthiness code as provided by Annex 8 to the Convention on International Civil Aviation, except as noted herein.

Exceptions:

NONE

6 TERMS AND CONDITIONS

Unless sooner surrendered, suspended, revoked, or a termination date is otherwise established by the Administrator, this airworthiness certificate is effective as long as the maintenance, preventative maintenance, and alterations are performed in accordance with Parts 21, 43, and 91 of the Federal Aviation Regulations, as appropriate, and the aircraft is registered in the United States.

DATE OF ISSUANCE	FAA REPRESENTATIVE	DESIGNATION NUMBER
R 01-23-75	MARK A. OCHS	DART-830176-SW

Any alteration, reproduction, or misuse of this certificate may be punishable by a fine not exceeding $1,000 or imprisonment not exceeding 3 years or both.

THIS CERTIFICATE MUST BE DISPLAYED IN THE AIRCRAFT IN ACCORDANCE WITH APPLICABLE FEDERAL AVIATION REGULATIONS.

FAA Form 8100-2 (3-08)

180 Airways LLC

854-A Centre Street
Ridgeland, MS 39158
(601) 968-7945

December 30, 2011

Jackson, MS, FSDO
C/O Mark Ochs
DART-830176-SW

Mr. Ochs,

The Airworthiness Certificate for Cessna 180MS has been lost or misplaced and cannot be found. I am requesting a replacement certificate.

Cessna 180MS is a 1975 Cessna 180J, serial number 18052551. It is registered to 180 Airways LLC.

Thank You for your assistance in this matter.

ALLEN E. BREWER
Member, 180 Airways LLC
601-968-7945
allen.brewer@us.army.mil

US Department of Transportation
Federal Aviation Administration

MAJOR REPAIR AND ALTERATION
(Airframe, Powerplant, Propeller, or Appliance)

Form Approved OMB No. 2120-0020 2/28/2011

Electronic Tracking Number

For FAA Use Only

INSTRUCTIONS: Print or type all entries. See Title 14 CFR §43.9, Part 43 Appendix B, and AC 43.9-1 (or subsequent revision thereof) for instructions and disposition of this form. This report is required by law (49 U.S.C.§44701). Failure to report can result in a civil penalty for each such violation. (49 U.S.C. §46301(a)).

1. Aircraft	Nationality and Registration Mark N180MS	Serial No. 18052551	
	Make Cessna	Model 180J	Series
2. Owner	Name *(As shown on registration certificate)* 180 Airways LLC	Address *(As shown on registration certificate)* Address 854A Centre ST City Ridgeland State MS Zip 39157-4515 Country USA	

3. For FAA Use Only

4. Type		5. Unit Identification			
Repair	Alteration	Unit	Make	Model	Serial No.
☐	☒	AIRFRAME	—	(As described in Item 1 above)	—
☐	☐	POWERPLANT			
☐	☐	PROPELLER			
☐	☐	APPLIANCE	Type Manufacturer		

6. Conformity Statement

A. Agency's Name and Address	B. Kind of Agency	
Name David C Entrekin	X U. S. Certificated Mechanic	Manufacturer
Address 273 Ingleside Dr	Foreign Certificated Mechanic	C. Certificate No.
City Madison State MS	Certificated Repair Station	A&P 3398557
Zip 39110 Country USA	Certificated Maintenance Organization	

D. I certify that the repair and/or alteratiion made to the unit(s) identified in item 5 above and described on the reverse or attachments hereto have been made in accordance with the requirements of Part 43 of the U.S. Federal Aviation Regulations and that the information furnished herein is true and correct to the best of my knowledge.

Extended range fuel per 14 CFR Part 43 App. B ☐

Signature/Date of Authorized Individual December 7, 2011

7. Approval for Return to Service

Pursuant to the authority given persons specified below, the unit identified in item 5 was inspected in the manner prescribed by the Administrator of the Federal Aviation Administration and is ☒ Approved ☐ Rejected

BY								
		FAA Flt. Standards Inspector		Manufacturer		Maintenance Organization		Persons Approved by Canadian Department of Transport
		FAA Designee		Repair Station	X	Inspection Authorization		Other *(Specify)*

Certificate or Designation No. 3398557

Signature/Date of Authorized Individual DAVID C. ENTREKIN December 7, 2011

FAA Form 337 (10-06)

NOTICE

Weight and balance or operating limitation changes shall be entered in the appropriate aircraft record. An alteration must be compatible with all previous alterations to assure continued conformity with the applicable airworthiness requirements.

8. Description of Work Accomplished

(If more space is required, attach additional sheets. Identify with aircraft nationality and registration mark and date work completed.)

N180MS December 7, 2011

Nationality and Registration Mark Date

Installed Airwolf Filter Corporation Remote Mounted Oil Filter Kit AFC-K008-C in accordance with installation instructions AFC-K008-II-C as amended 10/01/02. This installation is approved under STC SA00079NY approved model list as amended 7-21-99 item 9. Instructions for continued airworthiness are attached. STC permission statement is attached. The aircraft weight and balance were corrected by aircraft reweighing.

[X] Additional Sheets Are Attached

INSTRUCTIONS FOR CONTINUED AIRWORTHINESS

A/C Make: CESSNA Model: 180J S/N: 18052551 Reg#: N180MS

Revision: Date: DEC 7, 2011

This sixteen item checklist are Instructions for Continued Airworthiness (ICA), to comply with FAA Handbook Bulletin for Airworthiness (HBAW-98-18 Dated October 7, 1998), are applicable to the aircraft above when the following equipment is installed:

SYSTEM: Airwolf Remote Mount Oil Filter System.

Airwolf Filter Corp
15369 Madison Rd
Middlefield, OH 44062

ITEM	CHECKLIST INFORMATION
1.	Introduction: This section briefly describes the aircraft, engine, propeller, or component that has been altered. Include and other information on the content, scope, purpose, arrangement, applicability, definitions, abbreviations, precautions, units of measurement, reverenced publications, and distribution of the ICA as applicable. Comment: CESSNA 180J (Aircraft Model) with Continental IO470S3B (Engine Model) engine
2.	Description: Of the major alteration, it's function including an explanation of it's interface with other systems, if any. Comment: Installation of Airwolf Remote Mounted Oil Filter Kit P/N AFC-K008
3.	Control: Operation information: Or special procedures if any. Comment: Pre-heating of both the engine and engine oil is recommended prior to starting the engine during periods of cold weather where the temperature is 30°F or below.
4.	Servicing information: Such as types of fluids used, servicing points, and location of access panels, as appropriate. Comment: Oil System to be serviced in accordance with Continental Aircraft Engine Service Bulletin M87-12 Rev 1 or higher. Oil should be changed at least once each 12 months. Cut the old filter open with Airwolf AFC-470 oil filter cutter at each oil change and inspect for metal contamination or any evidence that may indicate impending engine problems.
5.	Maintenance Instructions: Such as recommended inspection/maintenance periods in which each of the major alteration components are inspected, cleaned, lubricated, adjusted, tested, including applicable wear tolerances and work recommended at each scheduled maintenance period. This section can refer to the manufactures instructions for the equipment installed where appropriate e.g. functional checks, repairs, inspections. It should also include any special notes, cautions, or warnings as applicable. Comment: Inspect for security at each annual or 100 hr . inspection. After any oil change, always ground run the engine and check for leaks before flight.
6.	Trouble shooting information: Information describing probably malfunctions, how to recognize those malfunctions, and the remedial actions to be taken. Comment: N/A
7.	Removal and replacement information: This section describes the order and method of removing and replacing products, parts, and any necessary precautions. This section should also describe or refer to the manufacture's instructions to make required tests, trim checks, alignment, calibrations, center of gravity changes, lifting or shoring, etc., if any. Comments: N/A
8.	Diagrams: Of access plates and information, if needed, to gain access for inspection. Comment: N/A
9.	Special inspection requirements: Such as X-ray, ultrasonic testing, or magnetic particle inspection, if required. Comment: N/A
10.	Application of protective treatments: To the affected area after inspection and/or maintenance, if any. Comment: N/A

N180MS DEC 7, 2011

INSTRUCTIONS FOR CONTINUED AIRWORTHINESS

11.	Data: Relative to structural fasteners such as type, torque, and installation requirements if any. Comment:__N/A
12.	List of special tools: Special tools that are required, if any. Comment:__N/A
13.	For commuter category aircraft: The following additional information must be furnished, as applicable: A. Electrical Loads B. Methods of balancing flight controls. C. Identification of primary and secondary structures> D. Special repair methods applicable to the airplane. Comment:__N/A
14.	Recommended overhaul periods: Are required to be noted on the ICA when an overhaul period has been set by the manufacturer of a component, or equipment. If there is no overhaul period, the ICA should state for item 14: "No additional overhaul time limitations." Comment:__N/A
15.	Airworthiness Limitation Section: Include any "approved" airworthiness limitations identified by the manufacturer of FAA type Certificate Holding Office (e.g., An STC incorporated in a larger field approved major alteration may have an airworthiness limitation.) The FAA inspector should not establish, alter, or cancel airworthiness limitations without coordinating with the appropriate FAA type Certificate Holding Office. If there are no changes to the airworthiness limitations, the ICA should state for item 15: "No additional airworthiness limitations" or " Not Applicable." Comment:__N/A
16.	Revision: This section should include information on how to revise the ICA. For example, a letter will be submitted to the local FSDO with a copy of the revised FAA Form 337 and revised ICA. The FAA inspection accepts the change by signing Block 3 and including the following statement: "The attached revised/new Instructions for Continued Airworthiness (date_____) for the above aircraft or component major alteration have been accepted by the FAA, superseding the Instructions for Continued Airworthiness (date_____)." Once the revision has been accepted, a maintenance record entry will be made, identifying the revision, its location, date of the Form 337. Comment:__ A letter will be submitted to the local FSDO with a copy of the revised FAA Form 337 and revised ICA. The FAA inspector accepts the change by signing Block 3 and including the following statement: "The attached revised/new Instructions for Continued Airworthiness (date_____) for the above aircraft or component major alteration have been accepted by the FAA, superseding the Instructions for Continued Airworthiness (date_____)." Once the revision has been accepted, a maintenance record entry will be made, identifying the revision, its location, date of the Form 337.

NOTE:

Implementation and Record Keeping: For major alterations performed in accordance with FAA Field Approval policy, the owner operator operating under part 91 is responsible for ensuring that the ICA is made part of the applicable section 91.409 inspection program for their aircraft. This is accomplished when a maintenance entry is made in the aircraft's maintenance record in accordance with section 43.9. This entry recorded the major alteration and identifies the original ICA location (e.g., Block 8 of FAA Form 337, dated 5/28/98) along with a statement that the ICA is now part of the aircraft's inspection/maintenance requirements.

For major alterations performed in accordance with field approval on air carrier aircraft, the air carrier operator is responsible for ensuring that the ICA is made part of the applicable inspection/maintenance program for their aircraft. If a procedure is not currently included in the operator's manual to incorporate ICA, this process will need to be appropriately addressed (i.e. the operator submits a revision to its maintenance program to the applicable certificate-holding district office (CHDO).

For aircraft inspected under an Approved Aircraft Inspection Program (AAIP), the operator will submit a change to the CHDO in accordance with section 135.419b).

For air carrier aircraft inspected using an annual/100 hour inspection program, a reference to the new ICA will be made in the aircraft's maintenance record in accordance with section 43.9. This entry records the major alteration and identifies the original ICA location (e.g., ICA are located/attached to Block 8 of FAA Form 337, dated 5/28/98). In addition, the operator will request a revision to the operator's Operations Specifications, additional maintenance requirements, which incorporates the ICA into the inspection program.

N180MS DEC 7, 2011

AIRWOLF FILTER CORP

15369 Madison Rd.
Middlefield, Ohio 44062-8404 U.S.A.
(800) 326-1534
(440) 632-5139 / (440) 632-1685 Fax
Website: www.airwolf.com
sales@airwolf.com / support@airwolf.com

Invoice No: 23755
Invoice Date: 7/27/2011

INVOICE

Bill to:
ALLEN BREWER
820 CHANNING PLACE

BRANDON MS 39047
USA

Ship to:

601-992-0407

ORDER DATE	SHIP DATE	TERMS	F.O.B.	P.O. Number	SHIP VIA	WEIGHT
7/27/2011	7-27-2011	MasterCard	Middlefield		UPS GROUND	

QTY	ITEM NO.	DESCRIPTION	UNIT PRICE	AMOUNT
1	AFC-K008-C	Oil Filter Kit - Cont 470/520/550	$480.00	$480.00
		CESSNA 180		
		CONT I0470		
		N180MS		
		S/N 18052551		
		PAID / MASTERCARD		

WAIVER OF LIABILITY AND INDEMNIFICATION AGREEMENT
Inasmuch as Airwolf Filter Corp. has no opportunity to supervise the installation or maintenance of parts supplied by it, nor any opportunity to participate in the design or manufacture of the product it sells, or of the various homebuilt and certificated aircraft in which its parts are utilized, the purchaser, by placing this order with Airwolf Filter Corp. and accepting the parts, agrees that all materials purchased will be used soley at purchaser's risk and that the purchaser will indemnify and hold Airwolf Filter Corp., its owners and employees, free, and harmless for all loss, liability, and damage resulting from claims brought by reason of any alledged failure or defect of any parts or parts supplied by Airwolf Filter Corp.

Any and all requests for return authorization must be made within 30 days from date of invoice and are subject to a 20% restock fee. All returns must be new and unused.

This invoice serves as a one time authorization to install the above described Airwolf Oil Filter Kit and or AirSep on the aircraft listed above.
Modification is to be done I/A/W Airwolf's STCs.

SUBTOTAL:	$480.00
SALES TAX:	$0.00
SHIPPING:	$15.00
ORDER TOTAL:	**$495.00**

US Department of Transportation
Federal Aviation Administration

MAJOR REPAIR AND ALTERATION
(Airframe, Powerplant, Propeller, or Appliance)

Form Approved OMB No. 2120-0020 2/28/2011

Electronic Tracking Number

For FAA Use Only

INSTRUCTIONS: Print or type all entries. See Title 14 CFR §43.9, Part 43 Appendix B, and AC 43.9-1 (or subsequent revision thereof) for instructions and disposition of this form. This report is required by law (49 U.S.C. §44701). Failure to report can result in a civil penalty for each such violation. (49 U.S.C. §46301(a))

1. Aircraft	Nationality and Registration Mark: N-180MS	Serial No.: 18052551	
	Make: Cessna	Model: 180	Series: J
2. Owner	Name *(As shown on registration certificate)*: Philly Group,Inc.	Address *(As shown on registration certificate)*: Address 4854, I-55 North; City Jackson; State MS; Zip 39211; Country USA	

3. For FAA Use Only

4. Type		5. Unit Identification			
Repair	Alteration	Unit	Make	Model	Serial No.
☐	☑	AIRFRAME	—	*(As described in Item 1 above)*	—
☐	☐	POWERPLANT			
☐	☐	PROPELLER			
☐	☐	APPLIANCE	Type / Manufacturer		

6. Conformity Statement

A. Agency's Name and Address	B. Kind of Agency	
Name: Felton Watkins	✓ U. S. Certificated Mechanic	☐ Manufacturer
Address: POB 2981	☐ Foreign Certificated Mechanic	C. Certificate No.
City: Meridian State: MS	☐ Certificated Repair Station	
Zip: 39302 Country: USA	☐ Certificated Maintenance Organization	262944299

D. I certify that the repair and/or alteration made to the unit(s) identified in item 5 above and described on the reverse or attachments hereto have been made in accordance with the requirements of Part 43 of the U.S. Federal Aviation Regulations and that the information furnished herein is true and correct to the best of my knowledge.

Extended range fuel per 14 CFR Part 43 App. B ☐

Signature/Date of Authorized Individual: Felton Watkins/ 21 Dec 2010

7. Approval for Return to Service

Pursuant to the authority given persons specified below, the unit identified in item 5 was inspected in the manner prescribed by the Administrator of the Federal Aviation Administration and is ☑ Approved ☐ Rejected

BY								
	☐	FAA Flt. Standards Inspector	☐	Manufacturer	☐	Maintenance Organization	☐	Persons Approved by Canadian Department of Transport
	☐	FAA Designee	☐	Repair Station	✓	Inspection Authorization		Other *(Specify)*

Certificate or Designation No.: A+P3218435

Signature/Date of Authorized Individual: TODD T. PRYOR 12/29/10

FAA Form 337 (10-06)

NOTICE

Weight and balance or operating limitation changes shall be entered in the appropriate aircraft record. An alteration must be compatible with all previous alterations to assure continued conformity with the applicable airworthiness requirements.

8. Description of Work Accomplished
(If more space is required, attach additional sheets. Identify with aircraft nationality and registration mark and date work completed.)

N-180MS	21 Dec 2010
Nationality and Registration Mark	Date

Installed Selkirk Aviation, Inc. Interior Kit (SA55-100) and Side Panel Kits (SA55-70, 55-71) in Cessna 180J aircraft per Selkirk Aviation (FAA Repair Station# LOGR640P) manufacture's kit drawing and instructions, dated November 21, 2000 and attached Supplemental Type Certificate (STC). Selkirk Aviation Kit parts utilized were: Left side front door post (SA55-01), Right side front door post (SA55-02), Left side front panel (SA55-03), Right side front panel (SA55-04), Left side door panel (SA55-05), Right side door panel (SA55-06), Right side middle panel (SA55-07), Left side middle panel (SA55-08), Right side aft panel (SA55-09), Baggage door panel (SA55-10), Right side aft window fairing (SA55-11), Left side aft window fairing (SA55-12), Baggage door post fairing (SA55-13), Right side front window fairing (SA55-15), Right side aft fairing (SA55-16), Left side front window fairing (SA55-17), Left side aft fairing (SA55-18) Flap tunnel cover (SA55-19), Trim control wheel cover (SA55-20), Rudder trim cover (SA55-21), Yoke control shield (SA55-23) Fuel tank selector cover (SA55-24), Baggage front post fairing (SA55-28)

END

☐ Additional Sheets Are Attached

United States of America

Department of Transportation - Federal Aviation Administration

Supplemental Type Certificate

Number SA00679SE

This certificate, issued to **Selkirk Aviation Inc.**
3377 West Industrial Loop
Coeur d'Alene, ID 83815

certifies that the change in the type design for the following product with the limitations and conditions therefore as specified hereon meets the airworthiness requirements of Part __*__ of the __*__ Regulations.

Original Product—Type Certificate Number: * See attached FAA-pproved Model List (AML)
Make: No. SA00679SE for a list of approved airplane
Model: models and applicable airworthiness regulations.

Description of the Type Design Change: Fabrication and installation of interior fiberglass trim panels in accordance with Selkirk Aviation Master Drawing List SA55-00, Revision A, dated December 1, 1998, or later FAA-approved revision and Installation Instructions SA55-II, Revision A, dated December 1, 1998, or later FAA-approved revision.

Limitations and Conditions: Approval of this change in type design applies to the aircraft models listed on the AML only. This approval should not be extended to other aircraft of these models on which other previously approved modifications are incorporated unless it is determined that the relationship between this change and any of those other previously approved modifications, including changes in type design, will introduce no adverse effect upon the airworthiness of that aircraft. A copy of this certificate and FAA AML No. SA00679SE must be maintained as part of the permanent records of the modified aircraft.

If the holder agrees to permit another person to use this certificate to alter the product, the holder shall give the other person written evidence of that permission.

This certificate and the supporting data which is the basis for approval shall remain in effect until surrendered, suspended, revoked, or a termination date is otherwise established by the Administrator of the Federal Aviation Administration.

For use only on
Cessna 180J
1975
N 180MS
For SA55-100 interior kit and SA55-70, 55-71 side panels

Date of application: March 1, 1998 Date reissued: May 20, 2010

Date of issuance: March 5, 1999 Date amended:

By direction of the Administrator

(Signature)

Acting Manager, Seattle Aircraft Certification Office
(Title)

Any alteration of this certificate is punishable by a fine of not exceeding $1,000, or imprisonment not exceeding 3 years, or both.

This certificate may be transferred in accordance with FAR 21.47.

FAA FORM 8110-2(10-68)

FAA-APPROVED MODEL LIST (AML) SA00679SE
FOR
SELKIRK AVIATION INTERIROR TRIM PANELS and DOME LIGHT COVERS

ISSUE DATE: March 5, 1999

ITEM	AIRCRAFT MAKE	* AIRCRAFT MODEL	ORIGINAL TC NUMBER	CERTIFICATION BASIS FOR ALTERATION	FAA-APPROVED MASTER DRAWING LIST		AML REV DATE
					Drawing	Revision**	
1.	CESSNA	170, 170A, 170B	A-799	CAR 3, dated Dec. 12, 1946, amended by 3-12	Master Drawing List: SA-59-00 Installation Instructions: SA59-II	Revision E, dated 10/1/2002 Revision E, dated 10/1/2002	1/15/2003
2.	CESSNA	172, 172A, 172B, 172C	3A12	CAR 3, dated Nov. 1, 1949, amended by 3-1 through 3-12	Master Drawing List: SA-59-00 Installation Instructions: SA59-II	Revision E, dated 10/1/2002 Revision E, dated 10/1/2002	1/15/2003
3.	CESSNA	175, 175A, 175B, 175C	3A17	CAR 3, dated May 15, 1956	Master Drawing List: SA-59-00 Installation Instructions: SA59-II	Revision E, dated 10/1/2002 Revision E, dated 10/1/2002	1/15/2003
4.	CESSNA	180, 180A, 180B, 180C, 180D, 180E, 180F, 180G, 180H, 180J, 180K	5A6	CAR 3 and TCDS 5A6	Master Drawing List: SA-59-00 Installation Instructions: SA59-II	Revision E, dated 10/1/2002 Revision E, dated 10/1/2002	1/15/2003
5.	CESSNA	182, 182A, 182B, 182C, 182D	3A13	CAR 3 and TCDS 3A13	Master Drawing List: SA-59-00 Installation Instructions: SA59-II	Revision E, dated 10/1/2002 Revision E, dated 10/1/2002	1/15/2003
6.	CESSNA	185, 185A, 185B, 185C, 185D, 185E, 185F, A185E, A185F	3A24	CAR 3 and TCDS 3A24	Master Drawing List: SA-59-00 Installation Instructions: SA59-II	Revision E, dated 10/1/2002 Revision E, dated 10/1/2002	1/15/2003

* Limited application, see airplane serial numbers listed in Installation Instructions SA55-II, Revision E, dated 10/1/2002, or later FAA-approved Revision

** Or later FAA-approved Revision

For use only on Cessna 180J 1976 N 180MS For SA55-100 interior kit and SA55-70 55-71 side panels

FAA Approved: _____

Acting Manager, Seattle Aircraft Certification Office

AMENDED: September 3, 2002; January 15, 2003; May 20, 2010

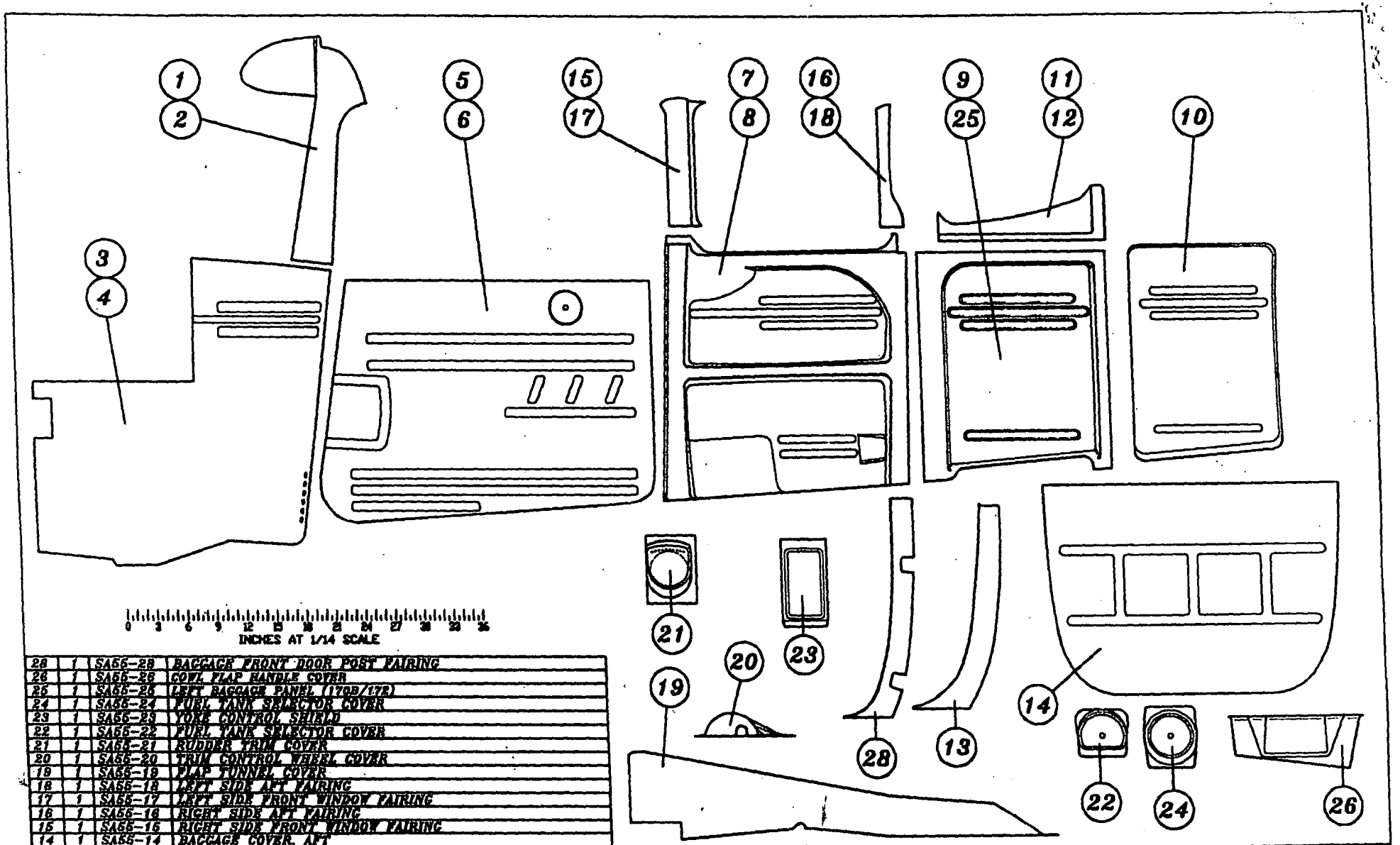

ITM	QTY	P/N	DESCRIPTION
28	1	SA55-28	BAGGAGE FRONT DOOR POST FAIRING
27	1	SA55-27	COWL FLAP HANDLE COVER
26	1	SA55-26	LEFT BAGGAGE PANEL (170B/172)
24	1	SA55-24	FUEL TANK SELECTOR COVER
23	1	SA55-23	YOKE CONTROL SHIELD
22	1	SA55-22	FUEL TANK SELECTOR COVER
21	1	SA55-21	RUDDER TRIM COVER
20	1	SA55-20	TRIM CONTROL WHEEL COVER
19	1	SA55-19	FLAP TUNNEL COVER
18	1	SA55-18	LEFT SIDE AFT FAIRING
17	1	SA55-17	LEFT SIDE FRONT WINDOW FAIRING
16	1	SA55-16	RIGHT SIDE AFT FAIRING
15	1	SA55-15	RIGHT SIDE FRONT WINDOW FAIRING
14	1	SA55-14	BAGGAGE COVER, AFT
13	1	SA55-13	BAGGAGE DOOR POST FAIRING
12	1	SA55-12	LEFT SIDE AFT WINDOW FAIRING
11	1	SA55-11	RIGHT SIDE AFT WINDOW FAIRING
10	1	SA55-10	BAGGAGE DOOR PANEL
9	1	SA55-09	RIGHT SIDE AFT PANEL
8	1	SA55-08	LEFT SIDE MIDDLE PANEL
7	1	SA55-07	RIGHT SIDE MIDDLE PANEL
6	1	SA55-06	RIGHT SIDE DOOR PANEL
5	1	SA55-05	LEFT SIDE DOOR PANEL
4	1	SA55-04	RIGHT SIDE FRONT PANEL
3	1	SA55-03	LEFT SIDE FRONT PANEL
2	1	SA55-02	RIGHT SIDE FRONT DOOR POST
1	1	SA55-01	LEFT SIDE FRONT DOOR POST

Unless otherwise specified, dimensions are in inches. Remove all burrs and break all edges.

Fractions	Angles	Decimals
±1/4	±1°	.0 ± .1
		.00 ± .01
		.000 ± .001

Material: FIBERGLASS, PER SA-PS101

Finish: LIGHTLY PEBBLED TEXTURE WITH GEL COAT FINISH

Drawn By: P.A.WELLS

Date: 06/15/98

Next Assembly: NA

Used On: CESSNA

Scale: 1/14

Sheet 1 Of 1 Rev A

Rev By: R.F.C.

Rev Date: Nov. 21 2000

Selkirk Aviation
3805 Industrial Ave.
Coeur d'Alene, ID 83814
208-664-9589

Title: CESSNA MODIFICATION: FIBERGLASS PANEL INSTALLATION

DWG#: SA55-00

Please note: Selkirk Aviation strives to trim each part to ¼ inch of the finished trim. It is the responsibility of the customer to finish the trimming and fit to the airplane.

Tools helpful for trimming parts: tin snips (for cutting flat areas only), belt sander (turned upside down and clamped to a table), sanding block with coarse paper, drum sander in electric drill, assorted files, and to attach fiberglass parts use #4 screws ½ inch long with NAS 391B4P finishing washers and a #42 drill bit.

Check #2.

KIT A

1945

Instructions for installing fiberglass parts for Cessna 180 years 1964-81 serial numbers 18051313 through 18053203. Cessna 182 years 1960 and 1961 serial numbers 52359 to 18253008. Cessna 185 years 1961 through 1985 serial numbers 1850001 through 18504425.

Remove the original interior trim pieces and save the attaching hardware for re-installation. If desired, the original screws and washers may be replaced by #4 countersunk sheet metal screws ½ inch long and NAS 391B4P finishing washers. Drill #42 holes through the new Selkirk parts and into the aircraft structure as close as possible to the original attach holes.

Install airplane front pieces first:
Install 55-01 and 55-02. Next install 55-03 and 55-04. For easiest installation of door panels, remove the door and place it on a flat surface. Then install 55-05 and 55-06.

Remove the original interior trim pieces and save the attaching hardware for re-installation if desired. The original screws and washers may be replaced by #4 countersunk sheet metal screws ½ inch long and nas391b4p finishing washers. Drill #42 holes through the new Selkirk parts and into the aircraft structure as close as possible to the original attach holes.

"CAUTION": WHEN INSTALLING 55-07, 55-08, 55-15 and 55-17, locate aluminum fuel line. Do not drill into the fuel line!

Next install right airplane rear pieces as follows: Install 55-09-1 first. Secondly, install 55-07 which will overlap 55-09-1. Then install 55-15 which will overlap the top of 55-07. Next install 55-11-1 which will overlap 55-09-1. Lastly install 55-16. Note: 55-07, 55-11-1 and 55-16 slip under the lip of the window. **Note:** Do not try to tuck the aft side of 55-16 and 55-18 into the window post. Let it go straight back to the plexiglass.

Next move to the rear left side of the airplane. Install 55-08 first. Secondly, install 55-17 which will overlap 55-08. Next install 55-13, 55-28, 55-12-1 and 55-18. Next install 55-10 and 55-14. Note: pieces 55-08, 55-12-1 and 55-17 slip under the lip of the window.

Now you are ready to install the tunnel. First locate, measure and drill hole for the airplane's gas shut-off valve. Raise flap handle to 40 degrees position. Slide tunnel cover over flap handle and down on to the tunnel. Next position 55-20 and install. Then position 55-21 and install. Then position 55-22 (use 55-22-1 for 1979 C185 and newer airplanes) or (55-24 for all C180 and 182) and install. Lastly drill holes in 55-23 and install. For 1977 and newer airplanes position and install 55-26. The last step is to install decals, first clean area decal will cover with alcohol or rub area with a Scotchbrite pad to remove wax from mold, then cut out decal and install in appropiate area.

Note: To remove scuffs use a clean Scotchbrite pad, then to remove light scratches coat with Armorall.

US Department of Transportation
Federal Aviation Administration

MAJOR REPAIR AND ALTERATION
(Airframe, Powerplant, Propeller, or Appliance)

Form Approved OMB No. 2120-0020 2/28/2011

Electronic Tracking Number

For FAA Use Only

INSTRUCTIONS: Print or type all entries. See Title 14 CFR §43.9, Part 43 Appendix B, and AC 43.9-1 (or subsequent revision thereof) for instructions and disposition of this form. This report is required by law (49 U.S.C. §44701). Failure to report can result in a civil penalty for each such violation. (49 U.S.C. §46301(a))

1. Aircraft	Nationality and Registration Mark: N180MS	Serial No.: 18052551	
	Make: Cessna	Model: 180J	Series:
2. Owner	Name *(As shown on registration certificate)*: Philly Group Inc	Address *(As shown on registration certificate)*: Address 4854 I-55 North; City Jackson; State MS; Zip 39211; Country USA	

3. For FAA Use Only

4. Type		5. Unit Identification			
Repair	Alteration	Unit	Make	Model	Serial No.
☐	☑	AIRFRAME	—	*(As described in Item 1 above)*	—
☐	☐	POWERPLANT			
☐	☐	PROPELLER			
☐	☐	APPLIANCE	Type / Manufacturer		

6. Conformity Statement

A. Agency's Name and Address
Name: David C Entrekin
Address: 273 Ingleside Dr
City: Madison State: MS
Zip: 39110 Country: USA

B. Kind of Agency
- ✓ U. S. Certificated Mechanic
- ☐ Foreign Certificated Mechanic
- ☐ Certificated Repair Station
- ☐ Certificated Maintenance Organization
- ☐ Manufacturer

C. Certificate No.: A&P 3398557

D. I certify that the repair and/or alteration made to the unit(s) identified in item 5 above and described on the reverse or attachments hereto have been made in accordance with the requirements of Part 43 of the U.S. Federal Aviation Regulations and that the information furnished herein is true and correct to the best of my knowledge.

Extended range fuel per 14 CFR Part 43 App. B ☐

Signature/Date of Authorized Individual: Oct 2, 2010

7. Approval for Return to Service

Pursuant to the authority given persons specified below, the unit identified in item 5 was inspected in the manner prescribed by the Administrator of the Federal Aviation Administration and is ☑ Approved ☐ Rejected

BY								
		FAA Flt. Standards Inspector		Manufacturer		Maintenance Organization		Persons Approved by Canadian Department of Transport
		FAA Designee		Repair Station	✓	Inspection Authorization		Other *(Specify)*

Certificate or Designation No.: 3398557

Signature/Date of Authorized Individual: Oct 2, 2010

NOTICE

Weight and balance or operating limitation changes shall be entered in the appropriate aircraft record. An alteration must be compatible with all previous alterations to assure continued conformity with the applicable airworthiness requirements.

8. Description of Work Accomplished
(If more space is required, attach additional sheets. Identify with aircraft nationality and registration mark and date work completed.)

N180MS	Oct 2, 2010
Nationality and Registration Mark	Date

Removed the airframe optional EGT system. Removed defective oil temp indicating system and oil pressure gage. Installed an Electronics International Inc OPT-1 Oil pressure and temperature gage and pressure transducer PT-100GA in accordance with installation document OI 0520911 Rev C dated 10/8/97. Power for the unit is derived from the primary bus via a dedicated 5 amp circuit breaker labeled "Oil Inst". This system is approved under TSO C47/ C43a (2% tolerance) for both pressure and temperature indications. This installation is approved under STC SA5925NM approved model list dated 2-17-93, item 7. The net effect on aircraft weight and balance was negligible. The maximum continuous alternator load does not exceed 80% of the alternator capacity.

Note: this gage is custom programmed from Electronics International to match the temp and pressure limits of the TCM IO470S engine as derived from TCDS 3E1. Any replacement gage for this aircraft must be ordered from EI and match programed in accordance with the applicable limits as indicated in TSDS 3E1 for the TCM IO470S.

☐ Additional Sheets Are Attached

US Department of Transportation
Federal Aviation Administration

MAJOR REPAIR AND ALTERATION
(Airframe, Powerplant, Propeller, or Appliance)

Form Approved OMB No. 2120-0020 2/28/2011

Electronic Tracking Number

For FAA Use Only

INSTRUCTIONS: Print or type all entries. See Title 14 CFR §43.9, Part 43 Appendix B, and AC 43.9-1 (or subsequent revision thereof) for instructions and disposition of this form. This report is required by law (49 U.S.C. §44701). Failure to report can result in a civil penalty for each such violation. (49 U.S.C. §46301(a))

1. Aircraft	Nationality and Registration Mark N180MS	Serial No. 18052551	
	Make Cessna	Model 180J	Series
2. Owner	Name *(As shown on registration certificate)* Philly Group Inc	Address *(As shown on registration certificate)* Address 4854 I-55 North City Jackson State ms Zip 39211 Country usa	

3. For FAA Use Only

4. Type		5. Unit Identification			
Repair	Alteration	Unit	Make	Model	Serial No.
☐	☑	AIRFRAME	—	*(As described in Item 1 above)*	—
☐	☐	POWERPLANT			
☐	☐	PROPELLER			
☐	☐	APPLIANCE	Type Manufacturer		

6. Conformity Statement

A. Agency's Name and Address	B. Kind of Agency		
Name David C Entrekin	✓	U. S. Certificated Mechanic	☐ Manufacturer
Address 273 Ingleside Dr	☐	Foreign Certificated Mechanic	C. Certificate No.
City Madison State MS	☐	Certificated Repair Station	
Zip 39110 Country USA	☐	Certificated Maintenance Organization	A&P 3398557

D. I certify that the repair and/or alteration made to the unit(s) identified in item 5 above and described on the reverse or attachments hereto have been made in accordance with the requirements of Part 43 of the U.S. Federal Aviation Regulations and that the information furnished herein is true and correct to the best of my knowledge.

Extended range fuel per 14 CFR Part 43 App. B ☐	Signature/Date of Authorized Individual Sept. 6, 2010

7. Approval for Return to Service

Pursuant to the authority given persons specified below, the unit identified in item 5 was inspected in the manner prescribed by the Administrator of the Federal Aviation Administration and is ☑ Approved ☐ Rejected

BY								
		FAA Flt. Standards Inspector		Manufacturer		Maintenance Organization		Persons Approved by Canadian Department of Transport
		FAA Designee		Repair Station	✓	Inspection Authorization		Other *(Specify)*

Certificate or Designation No. 3398557	Signature/Date of Authorized Individual Sept. 6, 2010

FAA Form 337 (10-06)

NOTICE

Weight and balance or operating limitation changes shall be entered in the appropriate aircraft record. An alteration must be compatible with all previous alterations to assure continued conformity with the applicable airworthiness requirements.

8. Description of Work Accomplished
(If more space is required, attach additional sheets. Identify with aircraft nationality and registration mark and date work completed.)

N180MS	Sept. 6, 2010
Nationality and Registration Mark	Date

Item One: Installed JPI, Inc. EGT 701 engine monitor system in accordance with JPI Report 103 rev. E. This installation is approved under STC SA2586NM approved model list dated 8-22-08 item 34.
Item Two: Installed BAS Inc. Inertial restraint system in accordance with report 1600 rev. A. This installation is approved under STC SA2067NM approved model list dated Nov. 29, 2000 item 7. The serialized and registration number assigned cover sheet and hence STC permission is attached.

Weight and Balance computations were amended by calculation.

☑ Additional Sheets Are Attached

United States of America

Department of Transportation—Federal Aviation Administration

Supplemental Type Certificate

IMPORTANT DOCUMENTS

KEEP WITH AIRCRAFT RECORDS

Number **SA2067NM**

Reg # N 180 MS
AC Ser. # 180 52551
B.A.S. Inc. Ser. #
1. 13599
2. 13600

This certificate, issued to BAS, Inc.
P.O. Box 190
13319 419th Street East
Eatonville, WA 98328

*certifies that the change in the type design for the following product with the limitations and conditions therefor as specified hereon meets the airworthiness requirements of Part * of the * Regulations.*

Original Product—Type Certificate Number: *See attached FAA Approved
Make: Model List (AML) No. SA2067NM for
Model: list of approved airplane models and applicable airworthiness regulations.

Description of the Type Design Change: Installation of BAS, Inc. TSO Shoulder Harness and BAS Inc. Harness System in accordance with the appropriate BAS Report listed on FAA AML SA2067NM, dated November 29, 2000, or later FAA approved revision.

Limitations and Conditions: Approval of this change in type design applies to the above model aircraft only. This approval should not be extended to other aircraft of this model on which other previously approved modifications are incorporated unless it is determined that the relationship between this change and any of those other previously approved modifications, including changes in type design, will introduce no adverse effect upon the airworthiness of that aircraft. A copy of this certificate and FAA Approved Model List (AML) No. SA2067NM must be maintained as part of the permanent records for the modified aircraft.

If the holder agrees to permit another person to use this certificate to alter the product, the holder shall give the other person written evidence of that permission.

This certificate and the supporting data which is the basis for approval shall remain in effect until surrendered, suspended, revoked, or a termination date is otherwise established by the Administrator of the Federal Aviation Administration.

Date of application: December 22, 1982
Date of issuance: June 2, 1983
Date reissued: April 15, 1986
Date amended: April 4, 1984, August 18, 1989
November 29, 2000

By direction of the Administrator

(Signature)

Acting Manager, Seattle Aircraft Certification Office

(Title)

Any alteration of this certificate is punishable by a fine of not exceeding $1,000, or imprisonment not exceeding 3 years, or both.

This certificate may be transferred in accordance with FAR 21.47.

FAA FORM 8110-2(10-68)

US Department of Transportation
Federal Aviation Administration

MAJOR REPAIR AND ALTERATION
(Airframe, Powerplant, Propeller, or Appliance)

Form Approved
OMB No. 2120-0020

For FAA Use Only
Office Identification

INSTRUCTIONS: Print or type all entries. See FAR 43.9, FAR 43 Appendix B, and AC 43.9-1 (or subsequent revision thereof) for instructions and disposition of this form. This report is required by law (49 U.S.C. 1421). Failure to report can result in a civil penalty not to exceed $1,000 for each such violation (Section 901 Federal Aviation Act of 1958).

1. Aircraft	Make: CESSNA	Model: 180J
	Serial No.: 18052551	Nationality and Registration Mark: N180MS
2. Owner	Name (As shown on registration certificate): Philly Group Inc	Address (As shown on registration certificate): 4854 I-55 North, Jackson Mississippi 39211

3. For FAA Use Only

4. Unit Identification / **5. Type**

Unit	Make	Model	Serial No.	Repair	Alteration
AIRFRAME	(As described in Item 1 above)				
POWERPLANT	Teledyne-Continental	IO-470-S	460003		X
PROPELLER					
APPLIANCE	Type				
	Manufacturer				

6. Conformity Statement

A. Agency's Name and Address	B. Kind of Agency	C. Certificate No.
MENA Aircraft Engines Inc 103 Aviation Lane Mena Arkansas 71953	[ ] U.S. Certificated Mechanic [ ] Foreign Certificated Mechanic [X] Certificated Repair Station [ ] Manufacturer	S9QR340N

D. I certify that the repair and/or alteration made to the unit(s) identified in item 4 above and described on the reverse or attachments hereto have been made in accordance with the requirements of Part 43 of the U.S. Federal Aviation Regulations and that the information furnished herein is true and correct to the best of my knowledge.

Date	Signature of Authorized Individual	
June 25, 2010	Robert Smith	Robert Smith Jr

7. Approval for Return To Service

Pursuant to the authority given persons specified below, the unit identified in item 4 was inspected in the manner prescribed by the Administrator of the Federal Aviation Administration and is [X] APPROVED [ ] REJECTED

BY							Other (Specify)
	[ ]	FAA Flt. Standards Inspector	[ ]	Manufacturer	[ ]	Inspection Authorization	
	[ ]	FAA Designee	[X]	Repair Station	[ ]	Person Approved by Transport Canada Airworthiness Group	

Date of Approval or Rejection	Certificate or Designation No.	Signature of Authorized Individual	
June 25, 2010	S9QR340N	Robert Smith	Robert Smith Jr

FAA Form 337 (12-88)

NOTICE

Weight and balance or operating limitation changes shall be entered in the appropriate aircraft record. An alteration must be compatible with all previous alterations to assure continued conformity with the applicable airworthiness requirements.

8. Description of Work Accomplished

(If more space is required, attach additional sheets. Identify with aircraft nationality and registration mark and date work completed.)

Removed six (6) TCM fuel nozzles P/N 627335D 12-C and installed General Aviation Modifications, Inc. GAMIjectors Kit No. GA012C S/N 20115 STC No. SE09217SC PMA No. PQ821SW per GAMIjector Installation Procedure No. IP-96-001 (Rev 004) dated September 25, 1996. No change in weight and balance. ////////////////// ////////////////////////////////////// END //////////////////////////////////////

☐ Additional Sheets Are Attached

United States Of America

Department of Transportation - Federal Aviation Administration

Supplemental Type Certificate

Number SE09217SC

This Certificate issued to General Aviation Modifications, Inc.
2800 Airport Road
Hangar A
Ada, OK 74820

*certifies that the change in the type design for the following product with the limitations and conditions therefor as specified hereon meets the airworthiness requirements of Part * of the * Regulations.*

Original Product Type Certificate Number: [see attached FAA Approved Model List (AML)

Make: for list of Approved models and applicable airworthiness

Model: regulations]

Description of Type Design Change: Installation of modified fuel injector nozzles in accordance with General Aviation Modifications Inc., "Data List", Revision 003, dated September 24, 1996, and Installation Procedure No. IP-96-001, "GAMIJECTOR Installation Procedure for Teledyne Continental Motors (TCM) IO-550/520/470 Engines", Revision 004, dated September 25, 1996, or later FAA approved revisions.

Limitations and Conditions: Compatibility of this design change with previously approved modifications must be determined by the installer. This STC does not allow any adjustment to the fuel injection control unit. Compliance with the following Teledyne Continental Service Bulletins is required: M78-11 Fuel Injection System Inspection; M85-19 Fuel Injection System Application Guide; M87-12 Rev.1 Recommended Fuel and Oil Grades; M89-10 Fuel System Adjustment; and M89-18 EGT Recommendations.

This certificate and the supporting data which is the basis for approval shall remain in effect until surrendered, suspended, revoked or a termination date is otherwise established by the Administrator of the Federal Aviation Administration.

Date of application: December 22, 1995

Date of issuance: April 30, 1996

Date reissued:

Date amended: 9/27/1996; January 08, 1997,Rev. 2

By direction of the Administrator

(Signature)

A. J. Merrill
Manager, Special Certification Office
Southwest Region

(Title)

Any alteration of this certificate is punishable by a fine of not exceeding $1,000, or imprisonment not exceeding 3 years, or both.

This certificate may be transferred in accordance with FAR 21.47.

FAA APPROVED MODEL LIST (AML)

STC No. SE09217SC

General Aviation Modifications, Inc.
2800 Airport Road, Hangar A
Ada, OK 74820

Date of Issuance: April 30, 1996
Date Amended: January 08, 1997, Rev. 2

Item	Aircraft Make	Aircraft Model	Original Type Certificate Number	Regulation / Part
1	Teledyne Continental Motors	IO-470-A & C	E-273	CAR 13
2	Teledyne Continental Motors	IO-470-D, E, F, G, H, J, K, L, LO, M, N, P, R, S, T, U, V, VO, & L/IO-470-A	3E1	CAR 13
3	Teledyne Continental Motors	IO-520-A, B, BA, BB, C, CB, D, E, F, J, K, L, M, & MB	E5CE	CAR 13
4	Teledyne Continental Motors	IO-550-A, B, C, D, E, F, & L	E3SO	FAR 33

FAA Approved:

Date: January 08, 1997

Pursuant to Title 49 United States Code § 44704 (b) (3) (effective October 19, 1996) the signature below constitutes the agreement and permission of General Aviation Modifications, Inc., allowing the registered owner of N 180MS, to alter that certain Teledyne Continental Motors Engine:

Model IO-470-S, SN 460003 and NA, and ONLY that serial number (or numbers), by application of STC No. SE09217SC, to that specific engine(s), for the purpose of installing the fuel injector nozzles which are the subject of that STC.

General Aviation Modifications, Inc.

By Tim Roehl, President
Or George W. Braly, CEO

[SEAL]

6-16-10
Date

US Department of Transportation
Federal Aviation Administration

MAJOR REPAIR AND ALTERATION
(Airframe, Powerplant, Propeller, or Appliance)

Form Approved
OMB No. 2120-0020

For FAA Use Only

Office Identification

INSTRUCTIONS: Print or type all entries. See FAR 43.9, FAR 43 Appendix B, and AC 43.9-1 (or subsequent revision thereof) for instructions and disposition of this form. This report is required by law (49 U.S.C. 1421). Failure to report can result in civil penalty not to exceed $1,000 for each such violation (Section 901 Federal Aviation Act of 1958).

1. Aircraft	Make: CESSNA	Model: 180J
	Serial No.: 52551	Nationality and Registration Mark: N180MS
2. Owner	Name *(As shown on registration certificate)*: PHILLY GROUP. INC.	Address *(As shown on registration certificate)*: 4854 I-55 NORTH JACKSON MS 39211

3. For FAA Use Only

4. Unit Identification / **5. Type**

Unit	Make	Model	Serial No.	Repair	Alteration
AIRFRAME	*(As described in Item 1 above)*				x
POWERPLANT					
PROPELLER					
APPLIANCE	Type / Manufacturer				

6. Conformity Statement

A. Agency's Name and Address	B. Kind of Agency	C. Certificate No.
M. H. BOWERING 36 JENNIFER COURT MADISON MS 39110	x U.S. Certificated Mechanic Foreign Certificated Mechanic Certificated Repair Station Manufacturer	1707558

D. I certify that the repair and/or alteration made to the unit(s) identified in item 4 above and described on the reverse or attachments hereto have been made in accordance with the requirements of Part 43 of the U.S. Federal Aviation Regulations and that the information furnished herin is true and correct to the best of my knowledge.

Date	Signature of Authorized Individual
12-18-06	M.H. Bow

7. Approval for Return To Service

Pursuant to the authority given persons specified below, the unit identified in item 4 was inspected in the manner prescribed by the Administrator of the Federal Aviation Administration and is ☒ APPROVED ☐ REJECTED

BY							
		FAA Flt. Standards Inspector		Manufacturer	x	Inspection Authorization	Other *(Specify)*
		FAA Designee		Repair Station		Person Approved by Transport Canada Airworthiness Group	

Date of Approval or Rejection	Certificate or Designation No.	Signature of Authorized Individual
12-18-06	1707558	M.H. Bow

NOTICE

Weight and balance or operating limitation changes shall be entered in the appropriate aircraft record. An alteration must be compatible with all previous alterations to assure continued conformity with the appicable airworthiness requirements.

8. Description of Work Accomplished

INSTALLED B.A.S. INC. TAIL PULL HANDLE I/ A/ W STC SA3812NM AND INSTALLATION INSTRUCTIONS TPH-1 REV. D APRIL 14, 2004.
INSTALLED CLEVELAND WHEEL AND BRAKE CONVERSION KIT P.N. 199-62 I/ A/ W STC SA63GL AND INSTALLATION MANUAL IM199-62 AND INSTALLATION DRAWINGS # 50-36.
WEIGHT AND BALANCE AND EQUIPMENT LIST ALTERED TO REFLECT INSTALLATION.

---------- END ----------

[ ] Additional Sheets Are Attached

U.S. Department of Transportation
Federal Aviation Administration

MAJOR REPAIR AND ALTERATION
(Airframe, Powerplant, Propeller, or Appliance)

Form Approved
OMB No.2120-0020

For FAA Use Only

Office Identification
SO-FSDO-09

INSTRUCTIONS: Print or type all entries. See FAR 43.9, FAR 43 Appendix B, and AC 43.9-1 (or subsequent revision thereof) for instructions and disposition of this form. This report is required by law (49 U.S.C. 1421). Failure to report can result in a civil penalty not to exceed $1,000 for each such violation (Section 901 Federal Aviation Act of 1958).

1. Aircraft	Make: Cessna	Model: 180J
	Serial No.: 18052551	Nationality and Registration Mark: N-180MS
2. Owner	Name (As shown on registration certificate): PHILLY GROUP, INC.	Address (As shown on registration certificate): 4854 I-55 NORTH JACKSON, MS 39211

3. For FAA Use Only

4. Unit Identification				**5. Type**	
Unit	Make	Model	Serial No.	Repair	Alteration
AIRFRAME	*(As described in item 1 above)*			X	
POWERPLANT					
PROPELLER					
APPLIANCE	Type / Manufacturer				

6. Conformity Statement

A. Agency's Name and Address	B. Kind of Agency	C. Certificate No.
STEPHAN SCHOMP 1217 COUNTY ROAD 723, CHANCELLOR, AL 36316	X U.S. Certificated Mechanic Foreign Certificated Mechanic Certificated Repair Station Manufacturer	422023738

D. I certify that the repair and/or alteration made to the unit(s) identified in item 4 above and described on the reverse or attachments hereto have been made in accordance with the requirements of Part 43 of the U.S. Federal Aviation Regulations and that the information furnished herein is true and correct to the best of my knowledge.

Date	Signature of Authorized Individual
29 DEC 2003	Stephan Schomp — Stephan Schomp

7. Approval for Return To Service

Pursuant to the authority given persons specified below, the unit identified in item 4 was inspected in the manner prescribed by the Administrator of the Federal Aviation Administration and is ☑ APPROVED ☐ REJECTED

BY							
		FAA Flt. Standards Inspector		Manufacturer	X	Inspection Authorization	Other *(Specify)*
		FAA Designee		Repair Station		Person Appoved by Transport Canada Airworthiness Group	

Date of Approval or Rejection	Certificate or Designation No.	Signature of Authorized Individual
29 DEC 2003	1757941	Donald W. Reagan

FAA Form 337 (12-88)

NOTICE

Weight and balance or operating limitation changes shall be entered in the appropriate aircraft record. An alteration must be compatible with all previous alterations to assure continued conformity with the applicable airworthiness requirements.

8. Description of Work Accomplished

(If more space is required, attach additional sheets. Identify with aircraft nationality and registration mark and date work completed.)

L/H WING

1. PLACED L/H WING IN WING JIG.
2. REMOVED DAMAGED SKINS FROM WING.
3. REPLACED CENTER RIBS 0523514-3 AND 0523515-3 WITH LIKE NEW RIBS.
4. REPLACED TRAILING EDGE RIBS 0523511-4 AND 0523512-4 WITH LIKE NEW RIBS.
5. INSTALLED NEW UPPER TOP AND TRAILING EDGE SKINS.
6. INSTALLED NEW LOWER BOTTOM AND TRAILING EDGE SKINS.
7. INSTALLED NEW AFT SPAR 0523206-2.

L/H FLAP

1. PLACED L/H FLAP IN FLAP JIG.
2. REMOVED CORRUGATED SKINS AND LEADING EDGE FROM FLAP.
3. REPLACED RIB OUTBOARD WITH NEW.
4. INSTALLED NEW CORRUGATED SKINS TOP AND BOTTOM.
5. INSTALLED NEW TRAILING EDGE STIFFENER.

L/H AILERON

1. PLACED L/H AILERON IN AILERON JIG.
2. REMOVED CORRUGATED SKINS TOP AND BOTTOM.
3. REPLACED SPAR 0523806 WITH NEW.
4. REPLACED CORRUGATED SKINS WITH NEW TOP AND BOTTOM.
5. PREBALANCED IN ACCORDANCE WITH MAINTENANCE MANUAL.

NOTE: ALL WORK DONE IN ACCORDANCE WITH MANUFACTURES MAINTENANCE MANUAL AND WITHIN SCOPE AND DETAIL OF AC 43.13-1B SECTION 4, ALL FASTENERS USED SAME AS OR EQUIVALENT TO ORIGINAL.

********** **NOTHING FOLLOWS** **********

☐ Additional Sheets Are Attatched

U.S. Department of Transportation
Federal Aviation Administration

MAJOR REPAIR AND ALTERATION
(Airframe, Powerplant, Propeller, or Appliance)

Form Approved
OMB No.2120-0020

For FAA Use Only

Office Identification ASO-FSDO-07 KMC

INSTRUCTIONS: Print or type all entries. See FAR 43.9, FAR 43 Appendix B, and AC 43.9-1 (or subsequent revision thereof) for instructions and disposition of this form. This report is required by law (49 U.S.C. 1421). Failure to report can result in a civil penalty not to exceed $1,000 for each such violation (Section 901 Federal Aviation Act of 1958).

1. Aircraft	Make: Cessna	Model: 180J
	Serial No.: 18052551	Nationality and Registration Mark: N180MJ
2. Owner	Name (As shown on registration certificate): Philly Group, Inc	Address (As shown on registration certificate): 4854 I-55 North, Jackson, MS, 39211

3. For FAA Use Only

4. Unit Identification				**5. Type**	
Unit	Make	Model	Serial No.	Repair	Alteration
AIRFRAME	*(As described in item 1 above)*				X
POWERPLANT					
PROPELLER					
APPLIANCE	Type / Manufacturer				

6. Conformity Statement

A. Agency's Name and Address	B. Kind of Agency	C. Certificate No.
David C Entrekin 273 Ingleside Drive Madison, MS 39110	X U.S. Certificated Mechanic Foreign Certificated Mechanic Certificated Repair Station Manufacturer	A&P 428118879

D. I certify that the repair and/or alteration made to the unit(s) identified in item 4 above and described on the reverse or attachments hereto have been made in accordance with the requirements of Part 43 of the U.S. Federal Aviation Regulations and that the information furnished herein is true and correct to the best of my knowledge.

Date	Signature of Authorized Individual
Sept. 26, 2003	

7. Approval for Return To Service

Pursuant to the authority given persons specified below, the unit identified in item 4 was inspected in the manner prescribed by the Administrator of the Federal Aviation Administration and is ☑ APPROVED ☐ REJECTED

BY							Other *(Specify)*
		FAA Flt. Standards Inspector		Manufacturer	X	Inspection Authorization	
		FAA Designee		Repair Station		Person Approved by Transport Canada Airworthiness Group	

Date of Approval or Rejection	Certificate or Designation No.	Signature of Authorized Individual
Sept. 26, 2003	428118879	

FAA Form 337 (12-88)

NOTICE

Weight and balance or operating limitation changes shall be entered in the appropriate aircraft record. An alteration must be compatible with all previous alterations to assure continued conformity with the applicable airworthiness requirements.

8. Description of Work Accomplished

(If more space is required, attach additional sheets. Identify with aircraft nationality and registration mark and date work completed.)

Dynamic balance weight attached to the propeller spinner bulkhead flange in accordance with the Aces Systems Guide to Propeller Balancing document 1000-OM-01 dated June 1996, FAA approved 10-8-96.

********** **NOTHING FOLLOWS** **********

☐ Additional Sheets Are Attatched

*U.S.GPO: 1994-568-012/00019

UNITED STATES OF AMERICA

DEPARTMENT OF TRANSPORTATION—FEDERAL AVIATION ADMINISTRATION

STANDARD AIRWORTHINESS CERTIFICATE

1. NATIONALITY AND REGISTRATION MARKS	2. MANUFACTURER AND MODEL	3. AIRCRAFT SERIAL NUMBER	4. CATEGORY
N180MS	CESSNA 180J	18052551	NORMAL

5. AUTHORITY AND BASIS FOR ISSUANCE

This airworthiness certificate is issued pursuant to the Federal Aviation Act of 1958 and certifies that, as of the date of issuance, the aircraft to which issued has been inspected and found to conform to the type certificate therefor, to be in condition for safe operation, and has been shown to meet the requirements of the applicable comprehensive and detailed airworthiness code as provided by Annex 8 to the Convention on International Civil Aviation, except as noted herein.

Exceptions:

NONE

6. TERMS AND CONDITIONS

Unless sooner surrendered, suspended, revoked, or a termination date is otherwise established by the Administrator, this airworthiness certificate is effective as long as the maintenance, preventative maintenance, and alterations are performed in accordance with Parts 21, 43, and 91 of the Federal Aviation Regulations, as appropriate, and the aircraft is registered in the United States.

DATE OF ISSUANCE	FAA REPRESENTATIVE	DESIGNATION NUMBER
(R)01/23/75	Ronnie W. Russum	SO-FSDO-07

Any alteration, reproduction, or misuse of this certificate may be punishable by a fine not exceeding $1,000, or imprisonment not exceeding 3 years, or both. THIS CERTIFICATE MUST BE DISPLAYED IN THE AIRCRAFT IN ACCORDANCE WITH APPLICABLE FEDERAL AVIATION REGULATIONS.

UNITED STATES OF AMERICA

DEPARTMENT OF TRANSPORTATION–FEDERAL AVIATION ADMINISTRATION

STANDARD AIRWORTHINESS CERTIFICATE

1. NATIONALITY AND REGISTRATION MARKS	2. MANUFACTURER AND MODEL	3. AIRCRAFT SERIAL NUMBER	4. CATEGORY
N52194	Cessna 180J	18052551	Normal

5. AUTHORITY AND BASIS FOR ISSUANCE

This airworthiness certificate is issued pursuant to the Federal Aviation Act of 1958 and certifies that, as of the date of issuance, the aircraft to which issued has been inspected and found to conform to the type certificate therefor, to be in condition for safe operation, and has been shown to meet the requirements of the applicable comprehensive and detailed airworthiness code as provided by Annex 8 to the Convention on International Civil Aviation, except as noted herein.

Exceptions:

None

6. TERMS AND CONDITIONS

Unless sooner surrendered, suspended, revoked, or a termination date is otherwise established by the Administrator, this airworthiness certificate is effective as long as the maintenance, preventative maintenance, and alterations are performed in accordance with Parts 43 and 91 of the Federal Aviation Regulations, as appropriate, and the aircraft is registered in the United States.

DATE OF ISSUANCE	FAA REPRESENTATIVE	DESIGNATION NUMBER
1-23-75	Executive Engineer Central Aircraft Div. / Pawnee Div. Delegation Option Manufacturer CF- By	PC4

Any alteration, reproduction, or misuse of this certificate may be punishable by a fine not exceeding $1,000, or imprisonment not exceeding 3 years, or both. THIS CERTIFICATE MUST BE DISPLAYED IN THE AIRCRAFT IN ACCORDANCE WITH APPLICABLE FEDERAL AVIATION REGULATIONS.

FAA Form 8100-2 (7-67) FORMERLY FAA FORM 1362

GPO 1967-O-270 931

~~[illegible]~~ Ref.

Bailey & Sprague

&

Burgess

FAA AIRCRAFT REGISTRY
CAMERA NO. /n DATE: 8-7-95

US Department of Transportation
Federal Aviation Administration

MAJOR REPAIR AND ALTERATION
(Airframe, Powerplant, Propeller, or Appliance)

Form Approved
OMB No. 2120-0020
For FAA Use Only
Office Identification: SO-09/MHM

INSTRUCTIONS: Print or type all entries. See FAR 43.9, FAR 43 Appendix B, and AC 43.9-1 (or subsequent revision thereof) for instructions and disposition of this form. This report is required by law (49 U.S.C. 1421). Failure to report can result in a civil penalty not to exceed $1,000 for each such violation (Section 901 Federal Aviation Act of 1958).

1. Aircraft	Make: Cessna	Model: 180J
	Serial No.: 18052551	Nationality and Registration Mark: N52194
2. Owner	Name (As shown on registration certificate): The Philly Group, Inc.	Address (As shown on registration certificate): P. O. Box 14125, Jackson, MS 39236

3. For FAA Use Only

4. Unit Identification				5. Type	
Unit	Make	Model	Serial No.	Repair	Alteration
AIRFRAME	(As described in Item 1 above)				X
POWERPLANT					
PROPELLER					
APPLIANCE	Type / Manufacturer				

6. Conformity Statement

A. Agency's Name and Address	B. Kind of Agency	C. Certificate No.
Monroeville Aviation & Avionics Center, Inc. P.O. Box 189 MOnroeville, AL 36461-0189	U.S. Certificated Mechanic; Foreign Certificated Mechanic; X Certificated Repair Station; Manufacturer	HX4R248M

D I certify that the repair and/or alteration made to the unit(s) identified in item 4 above and described on the reverse or attachments hereto have been made in accordance with the requirements of Part 43 of the U.S. Federal Aviation Regulations and that the information furnished herein is true and correct to the best of my knowledge.

Date: 2-17-95
Signature of Authorized Individual: Andrew Harbin

7. Approval for Return To Service

Pursuant to the authority given persons specified below, the unit identified in item 4 was inspected in the manner prescribed by the Administrator of the Federal Aviation Administration and is ☒ APPROVED ☐ REJECTED

BY						
	FAA Flt. Standards Inspector		Manufacturer		Inspection Authorization	Other (Specify)
	FAA Designee	X	Repair Station		Person Approved by Transport Canada Airworthiness Group	

Date of Approval or Rejection	Certificate or Designation No.	Signature of Authorized Individual
2-17-95	HX4R248M	Andrew Harbin

FAA Form 337 (12-88)

FAA AIRCRAFT REGISTRY
CAMERA NO. 1N DATE: 8-7-95

NOTICE

Weight and balance or operating limitation changes shall be entered in the appropriate aircraft record. An alteration must be compatible with all previous alterations to assure continued conformity with the applicable airworthiness requirements.

8. Description of Work Accomplished
(If more space is required, attach additional sheets. Identify with aircraft nationality and registration mark and date work completed.)

Removed Carter Engineering CE 705E audio panel S/N 474154, King KR-22 marker beacon receiver S/N 7358 and KGS RB 125 power converter. Installed Bendix/King KMA-24 audio panel S/N 101085 and P.S. Engineering PM 1000II intercom S/N I03941-N. Equipment installed in accordance with manufacturers instructions and FAA A.C. 43.13-2A Chapter 2.

Updated Log Book, equipment list, weight and balance.

**********END**********

☐ Additional Sheets Are Attached

★U.S.GPO:1990-0-588-012/40004

FAA AIRCRAFT REGISTRY
CAMERA NO. 3 N DATE: 12 - 17 - 90

US Department of Transportation
Federal Aviation Administration

MAJOR REPAIR AND ALTERATION
(Airframe, Powerplant, Propeller, or Appliance)

Form Approved
OMB No. 2120-0020

For FAA Use Only
Office Identification

MAR 1990 RECEIVED PAL FSDO

INSTRUCTIONS: Print or type all entries. See FAR 43.9, FAR 43 Appendix B, and AC 43.9-1 (or subsequent revision thereof) for instructions and disposition of this form. This report is required by law (49 U.S.C. 1421). Failure to report can result in a civil penalty not to exceed $1,000 for each such violation (Section 901 Federal Aviation Act of 1958).

1. Aircraft	Make: CESSNA	Model: 180J
	Serial No.: 18052551	Nationality and Registration Mark: N52194
2. Owner	Name (As shown on registration certificate): RIVERSIDE COUNTY SHERIFF	Address (As shown on registration certificate): P.O. BOX 512 RIVERSIDE, CA. 92502

3. For FAA Use Only

The data described herein complies with applicable airworthiness requirements and is approved only for the above described aircraft subject conformity inspection by a person authorized in FAR 43.7.

4/2/90 — Date — Approving Inspector — WPR-SDO-97

4. Unit Identification / 5. Type

Unit	Make	Model	Serial No.	Repair	Alteration
AIRFRAME	(As described in Item 1 above)				X
POWERPLANT					
PROPELLER					
APPLIANCE	Type				
	Manufacturer				

6. Conformity Statement

A. Agency's Name and Address	B. Kind of Agency	C. Certificate No.
BRACKETT AIRCRAFT RADIO 1911 MC KINLEY AVE. LA VERNE, CA. 91750	U.S. Certificated Mechanic Foreign Certificated Mechanic X Certificated Repair Station Manufacturer	RADIO #4512 CLASS 1-2 AND LIMITED

D. I certify that the repair and/or alteration made to the unit(s) identified in item 4 above and described on the reverse or attachments hereto have been made in accordance with the requirements of Part 43 of the U.S. Federal Aviation Regulations and that the information furnished herein is true and correct to the best of my knowledge.

Date	Signature of Authorized Individual
03/20/90	INST. INSPECTOR

7. Approval for Return To Service

Pursuant to the authority given persons specified below, the unit identified in item 4 was inspected in the manner prescribed by the Administrator of the Federal Aviation Administration and is ☒ APPROVED ☐ REJECTED

BY							Other (Specify)
		FAA Flt. Standards Inspector		Manufacturer		Inspection Authorization	
		FAA Designee	X	Repair Station		Person Approved by Transport Canada Airworthiness Group	

Date of Approval or Rejection	Certificate or Designation No.	Signature of Authorized Individual
03/20/90		CHIEF INSPECTOR

FAA Form 337 (4-87)

FAA AIRCRAFT REGISTRY
CAMERA NO: 3 N DATE: 12 - 17 - 90

NOTICE

Weight and balance or operating limitation changes shall be entered in the appropriate aircraft record. An alteration must be compatible with all previous alterations to assure continued conformity with the applicable airworthiness requirements.

8. Description of Work Accomplished
(If more space is required, attach additional sheets. Identify with aircraft nationality and registration mark and date work completed.)

Installed King KR10A Radar Altimeter. Installed Dual P.D. Communication Transceivers; RT units placed under rear passenger seat. Installed Carter Audio Distributor System. Installed P.A. System; Amplifiers and Speakers System located in the rear section aft baggage compartment. Installed Search light in the right side of fuselage aft door.

All work was performed in accordance with the manufacturer's instruction manual(s) and AC43.13-1A Chapter 15 Sections 1, 2, 3, 4, 5, and 6. The work was accepted under AC43.13-2A Chapter 2 Sections 21, 22, 23, 25, and 27, and Chapter 3 Sections 36 and 37. Weight and Balance was performed and a logbook entry made. Total electrical output doesn't exceed 80% of alternator output. See Work Order on file at this Repair Station for further information.

----------NOTHING FOLLOWS----------

☐ Additional Sheets Are Attached

FAA AIRCRAFT REGISTRY
CAMERA NO. 2 DATE: 7-21-89

U.S. DEPARTMENT OF TRANSPORTATION
FEDERAL AVIATION ADMINISTRATION

MAJOR REPAIR AND ALTERATION
(Airframe, Powerplant, Propeller, or Appliance)

Form Approved
Budget Bureau No. 04-R060.1

FOR FAA USE ONLY

OFFICE IDENTIFICATION
GL-GADO-14

INSTRUCTIONS: Print or type all entries. See FAR 43.9, FAR 43 Appendix B, and AC 43.9-1 (or subsequent revision thereof) for instructions and disposition of this form.

1. AIRCRAFT	MAKE: Cessna	MODEL: 180J
	SERIAL NO.: 18052551	NATIONALITY AND REGISTRATION MARK: N52194
2. OWNER	NAME (As shown on registration certificate): North Country Aircraft Sales, Inc	ADDRESS (As shown on registration certificate): Hanger one Duluth INTL Airport Duluth, MN. 55811

3. FOR FAA USE ONLY

4. UNIT IDENTIFICATION				5. TYPE	
UNIT	MAKE	MODEL	SERIAL NO.	REPAIR	ALTERATION
AIRFRAME	(As described in item 1 above)				XX
POWERPLANT					
PROPELLER					
APPLIANCE	TYPE / MANUFACTURER				

6. CONFORMITY STATEMENT

A. AGENCY'S NAME AND ADDRESS	B. KIND OF AGENCY	C. CERTIFICATE NO.
South State Avionics, Inc. Rt-5, Box 122B Mankato, MN. 56001	U.S. CERTIFICATED MECHANIC FOREIGN CERTIFICATED MECHANIC XX CERTIFICATED REPAIR STATION MANUFACTURER	C14-12

D. I certify that the repair and/or alteration made to the unit(s) identified in item 4 above and described on the reverse or attachments hereto have been made in accordance with the requirements of Part 43 of the U.S. Federal Aviation Regulations and that the information furnished herein is true and correct to the best of my knowledge.

DATE	SIGNATURE OF AUTHORIZED INDIVIDUAL
May 19, 1988	Donald E. Anderson

7. APPROVAL FOR RETURN TO SERVICE

Pursuant to the authority given persons specified below, the unit identified in item 4 was inspected in the manner prescribed by the Administrator of the Federal Aviation Administration and is ☒ APPROVED ☐ REJECTED

BY							OTHER (Specify)
		FAA FLT. STANDARDS INSPECTOR		MANUFACTURER		INSPECTION AUTHORIZATION	
		FAA DESIGNEE	X	REPAIR STATION		CANADIAN DEPARTMENT OF TRANSPORT INSPECTOR OF AIRCRAFT	C14-12

DATE OF APPROVAL OR REJECTION	CERTIFICATE OR DESIGNATION NO.	SIGNATURE OF AUTHORIZED INDIVIDUAL
5-19-88	C14-12	Donald E. Anderson

FAA Form 337 (7-67) (8320)

FAA AIRCRAFT REGISTRY
CAMERA NO. 2 DATE: 7-21-89

NOTICE

Weight and balance or operating limitation changes shall be entered in the appropriate aircraft record. An alteration must be compatible with all previous alterations to assure continued conformity with the applicable airworthiness requirements.

8. DESCRIPTION OF WORK ACCOMPLISHED *(If more space is required, attach additional sheets. Identify with aircraft nationality and registration mark and date work completed.)*

Installed ARNAV model R-30A Loran C navigation receiver. Installed in accordance with manufactures installation manual and A.C.43.13-1A chapter 11 sections 2-3-5&7, and A.C.43.13-2A chapters 2&3. Weight and balance revised, log book entry made.

Aircraft was ground and flight tested for static interferance in accordance with A.C.90,45A. A "Loran C approved for VFR only" placard was installed on the instrument panel in front of the pilot. An operation manual was added to aircraft logs and manuals.

----------END----------

MINNEAPOLIS GADO-14
MNGR
APS
JUN 7 1988

☐ ADDITIONAL SHEETS ARE ATTACHED

☆ U.S. GOVERNMENT PRINTING OFFICE: 1986-659-121/40146

FAA AIRCRAFT REGISTRY
CAMERA NO. 2 DATE: 7-21-89

U.S. DEPARTMENT OF TRANSPORTATION
FEDERAL AVIATION ADMINISTRATION

Form Approved
Budget Bureau No. 04-R060.1

FOR FAA USE ONLY
OFFICE IDENTIFICATION
AGL-GADO-14

MAJOR REPAIR AND ALTERATION
(Airframe, Powerplant, Propeller, or Appliance)

INSTRUCTIONS: Print or type all entries. See FAR 43.9, FAR 43 Appendix B, and AC 43.9-1 (or subsequent revision thereof) for instructions and disposition of this form.

1. AIRCRAFT	MAKE: Cessna	MODEL: 180J
	SERIAL NO.: 180-52551	NATIONALITY AND REGISTRATION MARK: N52194
2. OWNER	NAME (As shown on registration certificate): North Country Aircraft Sales, Inc.	ADDRESS (As shown on registration certificate): Hangar One Duluth Intl Airport Duluth, MN 55811

3. FOR FAA USE ONLY

4. UNIT IDENTIFICATION / 5. TYPE

UNIT	MAKE	MODEL	SERIAL NO.	REPAIR	ALTERATION
AIRFRAME	(As described in item 1 above)				X
POWERPLANT					
PROPELLER					
APPLIANCE	TYPE / MANUFACTURER				

6. CONFORMITY STATEMENT

A. AGENCY'S NAME AND ADDRESS	B. KIND OF AGENCY	C. CERTIFICATE NO.
James Imberg Hangar One Duluth Intl Airport Duluth, MN 55811	X U.S. CERTIFICATED MECHANIC FOREIGN CERTIFICATED MECHANIC CERTIFICATED REPAIR STATION MANUFACTURER	A&P 477887836

D. I certify that the repair and/or alteration made to the unit(s) identified in item 4 above and described on the reverse or attachments hereto have been made in accordance with the requirements of Part 43 of the U.S. Federal Aviation Regulations and that the information furnished herein is true and correct to the best of my knowledge.

DATE	SIGNATURE OF AUTHORIZED INDIVIDUAL
May 2, 1988	James Imberg

7. APPROVAL FOR RETURN TO SERVICE

Pursuant to the authority given persons specified below, the unit identified in item 4 was inspected in the manner prescribed by the Administrator of the Federal Aviation Administration and is [X] APPROVED [ ] REJECTED

BY							OTHER (Specify)
		FAA FLT. STANDARDS INSPECTOR		MANUFACTURER		INSPECTION AUTHORIZATION	
		FAA DESIGNEE	X	REPAIR STATION		CANADIAN DEPARTMENT OF TRANSPORT INSPECTOR OF AIRCRAFT	

DATE OF APPROVAL OR REJECTION	CERTIFICATE OR DESIGNATION NO.	SIGNATURE OF AUTHORIZED INDIVIDUAL
May 2, 1988	C14-21	Donald L. Kelso

FAA Form 337 (7-67) (8320)

FAA AIRCRAFT REGISTRY
CAMERA NO. 2 DATE: 7-21-89

NOTICE

Weight and balance or operating limitation changes shall be entered in the appropriate aircraft record. An alteration must be compatible with all previous alterations to assure continued conformity with the applicable airworthiness requirements.

8. DESCRIPTION OF WORK ACCOMPLISHED *(If more space is required, attach additional sheets. Identify with aircraft nationality and registration mark and date work completed.)*

Installed Stol-Craft kit and droop wing tips in accordance with Stol-Craft drawing 2050 sheet 4 of 4. Approved by STC #SA967CE. New weight and balance calculated and entered in aircraft records.

----------END----------

0-1	0-2	0-3	0-4	0-5	0-6	0-7	0-8	0-9	0-10	0-11
MNGR	MINNEAPOLIS GADO-14								C-1	
APB	MAY - 4 1988								C-2	
									C-3	
M-1	M-2	M-3	M-4	M-5	M-6	M-7	M-8		A-1	A-2

☐ ADDITIONAL SHEETS ARE ATTACHED

☆U.S. GOVERNMENT PRINTING OFFICE: 1986-659-121/40260

FAA AIRCRAFT REGISTRY
CAMERA NO. 2 DATE: 7-21-89

FAA

DEPARTMENT OF TRANSPORTATION
FEDERAL AVIATION ADMINISTRATION

RECEIVED
JUN 20 1988
FAA-FSDO-AW

Form Approved
Budget Bureau No. 04-R060.1

FOR FAA USE ONLY

OFFICE IDENTIFICATION
NM-FSFO-61A

MAJOR REPAIR AND ALTERATION
(Airframe, Powerplant, Propeller, or Appliance)

INSTRUCTIONS: Print or type all entries. See FAR 43.9, FAR 43 Appendix B, and AC 43.9-1 (or subsequent revision thereof) for instructions and disposition of this form.

1. AIRCRAFT	MAKE: Cessna	MODEL: 180J
	SERIAL NO.: 180-52551	NATIONALITY AND REGISTRATION MARK: N52194
2. OWNER	NAME (As shown on registration certificate): North Country Aircraft Sales, Inc.	ADDRESS (As shown on registration certificate): Hangar One Duluth Int'l Airport Duluth, MN 55811

3. FOR FAA USE ONLY

The alteration identified herein complies with applicable airworthiness requirements and is approved only for the above described aircraft subject to conformity inspection by a person authorized in FAR 43.

MAR 1 1988
Date Inspector

4. UNIT IDENTIFICATION NM-FSFO-61A

UNIT	MAKE	MODEL	SERIAL NO.	5. TYPE: REPAIR	5. TYPE: ALTERATION
AIRFRAME	(As described in item 1 above)				
POWERPLANT					
PROPELLER					
APPLIANCE	TYPE / MANUFACTURER				

6. CONFORMITY STATEMENT

A. AGENCY'S NAME AND ADDRESS	B. KIND OF AGENCY	C. CERTIFICATE NO.
North Country Aviation 8222 Stebner Rd Duluth MN 55811	U.S. CERTIFICATED MECHANIC FOREIGN CERTIFICATED MECHANIC X CERTIFICATED REPAIR STATION MANUFACTURER	C 14-21

D. I certify that the repair and/or alteration made to the unit(s) identified in item 4 above and described on the reverse or attachments hereto have been made in accordance with the requirements of Part 43 of the U.S. Federal Aviation Regulations and that the information furnished herein is true and correct to the best of my knowledge.

DATE: MAR 1 1988

SIGNATURE OF AUTHORIZED INDIVIDUAL: Donald R Kehoe

7. APPROVAL FOR RETURN TO SERVICE

Pursuant to the authority given persons specified below, the unit identified in item 4 was inspected in the manner prescribed by the Administrator of the Federal Aviation Administration and is ☒ APPROVED ☐ REJECTED

BY					
	FAA FLT. STANDARDS INSPECTOR		MANUFACTURER	INSPECTION AUTHORIZATION	OTHER (Specify)
	FAA DESIGNEE	X	REPAIR STATION	CANADIAN DEPARTMENT OF TRANSPORT INSPECTOR OF AIRCRAFT	

DATE OF APPROVAL OR REJECTION: MAR 1 1988

CERTIFICATE OR DESIGNATION NO.: C 14-21

SIGNATURE OF AUTHORIZED INDIVIDUAL: Donald R Kehoe

(8320)

FAA Form 337 (7-67)

FAA AIRCRAFT REGISTRY
CAMERA NO. 2 DATE: 7-21-89

NOTICE

Weight and balance or operating limitation changes shall be entered in the appropriate aircraft record. An alteration must be compatible with all previous alterations to assure continued conformity with the applicable airworthiness requirements.

8. DESCRIPTION OF WORK ACCOMPLISHED *(If more space is required, attach additional sheets. Identify with aircraft nationality and registration mark and date work completed.)*

This 337 is a amendment to 337 dated August 16, 1985.

The 337 dated August 16, 1985 should have included the McCauley propeller model D2A34C49-N with 190A model blades in its utilization list, which was previously approved on form 337 dated August 21, 1981 Item #1.

This 337 is to cover the addition of the McCauley propeller model D2A34C49-N/90A to that list. This 337 does not cover any aircraft system or components not listed here on.

----------END----------

☐ ADDITIONAL SHEETS ARE ATTACHED

☆U.S. GOVERNMENT PRINTING OFFICE: 1977—771-021/344

FAA AIRCRAFT REGISTRY
CAMERA NO. 2 DATE: 7-21-89

U.S. DEPARTMENT OF TRANSPORTATION
FEDERAL AVIATION ADMINISTRATION

MAJOR REPAIR AND ALTERATION
(Airframe, Powerplant, Propeller, or Appliance)

Form Approved
Budget Bureau No. 04-R060.1

FOR FAA USE ONLY
OFFICE IDENTIFICATION
GL-GADO-14

INSTRUCTIONS: Print or type all entries. See FAR 43.9, FAR 43 Appendix B, and AC 43.9-1 (or subsequent revision thereof) for instructions and disposition of this form.

1. AIRCRAFT	MAKE: Cessna	MODEL: 180J
	SERIAL NO.: 18052551	NATIONALITY AND REGISTRATION MARK: N52194
2. OWNER	NAME (As shown on registration certificate): North Country Aircraft Sales Inc.	ADDRESS (As shown on registration certificate): Hangar One, Duluth INTL Airport Duluth, MN. 55811

3. FOR FAA USE ONLY

4. UNIT IDENTIFICATION / 5. TYPE

UNIT	MAKE	MODEL	SERIAL NO.	REPAIR	ALTERATION
AIRFRAME	(As described in item 1 above)				XX
POWERPLANT					
PROPELLER					
APPLIANCE	TYPE / MANUFACTURER				

6. CONFORMITY STATEMENT

A. AGENCY'S NAME AND ADDRESS	B. KIND OF AGENCY	C. CERTIFICATE NO.
South State Avionics, Inc. Rt-5, Box 122B Mankato, MN. 56001	U.S. CERTIFICATED MECHANIC / FOREIGN CERTIFICATED MECHANIC / X CERTIFICATED REPAIR STATION / MANUFACTURER	C14-12

D. I certify that the repair and/or alteration made to the unit(s) identified in item 4 above and described on the reverse or attachments hereto have been made in accordance with the requirements of Part 43 of the U.S. Federal Aviation Regulations and that the information furnished herein is true and correct to the best of my knowledge.

DATE	SIGNATURE OF AUTHORIZED INDIVIDUAL
December 24, 1987	Donald E. Anderson

7. APPROVAL FOR RETURN TO SERVICE

Pursuant to the authority given persons specified below, the unit identified in item 4 was inspected in the manner prescribed by the Administrator of the Federal Aviation Administration and is [X] APPROVED [ ] REJECTED

BY							
	FAA FLT. STANDARDS INSPECTOR		MANUFACTURER		INSPECTION AUTHORIZATION	OTHER (Specify)	
	FAA DESIGNEE	X	REPAIR STATION		CANADIAN DEPARTMENT OF TRANSPORT INSPECTOR OF AIRCRAFT	C14-12	

DATE OF APPROVAL OR REJECTION	CERTIFICATE OR DESIGNATION NO.	SIGNATURE OF AUTHORIZED INDIVIDUAL
12-24-87	C14-12	Donald E. Anderson

FAA Form 337 (7-67) (8320)

FAA AIRCRAFT REGISTRY
CAMERA NO. 2 DATE: 7-21-89

NOTICE

Weight and balance or operating limitation changes shall be entered in the appropriate aircraft record. An alteration must be compatible with all previous alterations to assure continued conformity with the applicable airworthiness requirements.

8. DESCRIPTION OF WORK ACCOMPLISHED *(If more space is required, attach additional sheets. Identify with aircraft nationality and registration mark and date work completed.)*

Installed King KMA-20, KX-175B, KX-170B, KI-214, KI-201C, KT-78A, Narco AR-850 blind encoder and markerbeacon antenna. All equipment was installed in accordance with manufactures installation manuals and A.C.43.13-1A chapter 11 sections 2-3-5&7, and A.C.43.13-2A chapters 2&3.
Ramp tested blind encoder and altimeter with approved static system tester and transponder ramp tester in accordance with A.C.43.6. Weight and balance revised, log book entry made.
----------END----------

☐ ADDITIONAL SHEETS ARE ATTACHED

☆ U.S. GOVERNMENT PRINTING OFFICE: 1986-659-121/40146

FAA AIRCRAFT REGISTRY
CAMERA NO. 2 DATE: 7-21-89

DEPARTMENT OF TRANSPORTATION
FEDERAL AVIATION ADMINISTRATION

MAJOR REPAIR AND ALTERATION
(Airframe, Powerplant, Propeller, or Appliance)

Form Approved
Budget Bureau No. 04-R060.1

FOR FAA USE ONLY
OFFICE IDENTIFICATION NM-FSFO-61

INSTRUCTIONS: Print or type all entries. See FAR 43.9, FAR 43 Appendix B, and AC 43.9-1 (or subsequent revision thereof) for instructions and disposition of this form.

1. AIRCRAFT	MAKE: CESSNA	MODEL: 180J
	SERIAL NO.: 18052551	NATIONALITY AND REGISTRATION MARK: N52194
2. OWNER	NAME (As shown on registration certificate): Whitehead Insurance Agency	ADDRESS (As shown on registration certificate): 1337 S Grand SPOKANE WA 99202

3. FOR FAA USE ONLY

4. UNIT IDENTIFICATION / **5. TYPE**

UNIT	MAKE	MODEL	SERIAL NO.	REPAIR	ALTERATION
AIRFRAME	(As described in item 1 above)				X
POWERPLANT					
PROPELLER					
APPLIANCE	TYPE / MANUFACTURER				

6. CONFORMITY STATEMENT

A. AGENCY'S NAME AND ADDRESS	B. KIND OF AGENCY	C. CERTIFICATE NO.
Richard W. Smith c/o FELTS FIELD AVN E 5929 RUTTER SPOKANE WA 99211	X U.S. CERTIFICATED MECHANIC FOREIGN CERTIFICATED MECHANIC CERTIFICATED REPAIR STATION MANUFACTURER	538365565

D. I certify that the repair and/or alteration made to the unit(s) identified in item 4 above and described on the reverse or attachments hereto have been made in accordance with the requirements of Part 43 of the U.S. Federal Aviation Regulations and that the information furnished herein is true and correct to the best of my knowledge.

DATE	SIGNATURE OF AUTHORIZED INDIVIDUAL
19 Aug 1985	Richard W. Smith

7. APPROVAL FOR RETURN TO SERVICE

Pursuant to the authority given persons specified below, the unit identified in item 4 was inspected in the manner prescribed by the Administrator of the Federal Aviation Administration and is ☒ APPROVED ☐ REJECTED

BY							
		FAA FLT. STANDARDS INSPECTOR		MANUFACTURER	X	INSPECTION AUTHORIZATION	OTHER (Specify)
		FAA DESIGNEE		REPAIR STATION		CANADIAN DEPARTMENT OF TRANSPORT INSPECTOR OF AIRCRAFT	

DATE OF APPROVAL OR REJECTION	CERTIFICATE OR DESIGNATION NO.	SIGNATURE OF AUTHORIZED INDIVIDUAL
19 Aug 1985	538365565	Richard W. Smith

FAA Form 337 (7-67) (8320)

FAA AIRCRAFT REGISTRY
CAMERA NO. 2 DATE: 7-21-89

NOTICE

Weight and balance or operating limitation changes shall be entered in the appropriate aircraft record. An alteration must be compatible with all previous alterations to assure continued conformity with the applicable airworthiness requirements.

8. DESCRIPTION OF WORK ACCOMPLISHED *(If more space is required, attach additional sheets. Identify with aircraft nationality and registration mark and date work completed.)*

Installed Bracket Airfilter Assy PN 8110 in Accordance with Instructions provided. Approved per STC-SA71GL List #1 and supplements.

- end -

NW-L2LO-RT

☐ ADDITIONAL SHEETS ARE ATTACHED

☆U.S. GOVERNMENT PRINTING OFFICE: 1977—771-021/290

FAA AIRCRAFT REGISTRY
CAMERA NO. 2 DATE: 7-21-89

DEPARTMENT OF TRANSPORTATION
FEDERAL AVIATION ADMINISTRATION

MAJOR REPAIR AND ALTERATION
(Airframe, Powerplant, Propeller, or Appliance)

Form Approved
Budget Bureau No. 04-R060.1

FOR FAA USE ONLY

OWNER REGISTRATION NM-FSFO-61

INSTRUCTIONS: Print or type all entries. See FAR 43.9, FAR 43 Appendix B, and AC 43.9-1 (or subsequent revision thereof) for instructions and disposition of this form.

1. AIRCRAFT	MAKE: Cessna	MODEL: 180J
	SERIAL NO.: 18052551	NATIONALITY AND REGISTRATION MARK: N52194
2. OWNER	NAME (As shown on registration certificate): Whitehead Insurance Agency	ADDRESS (As shown on registration certificate): 1337 S. Grand, Spokane, WA 99202

3. FOR FAA USE ONLY

The alteration identified herein complies with applicable airworthiness requirements and is approved only for the above described aircraft subject to conformity inspection by a person authorized in FAR 43.

Date AUG 1 6 1985 Inspector [signature]

4. UNIT IDENTIFICATION NM-FSFO-61

UNIT	MAKE	MODEL	SERIAL NO.	5. TYPE: REPAIR	5. TYPE: ALTERATION
AIRFRAME	(As described in item 1 above)				X
POWERPLANT					
PROPELLER					
APPLIANCE	TYPE / MANUFACTURER				

6. CONFORMITY STATEMENT

A. AGENCY'S NAME AND ADDRESS	B. KIND OF AGENCY	C. CERTIFICATE NO.
Charles Rohde c/o Felts Field Aviation, Inc Spokane, WA 99211	X U.S. CERTIFICATED MECHANIC FOREIGN CERTIFICATED MECHANIC CERTIFICATED REPAIR STATION MANUFACTURER	AP540727162

D. I certify that the repair and/or alteration made to the unit(s) identified in item 4 above and described on the reverse or attachments hereto have been made in accordance with the requirements of Part 43 of the U.S. Federal Aviation Regulations and that the information furnished herein is true and correct to the best of my knowledge.

DATE	SIGNATURE OF AUTHORIZED INDIVIDUAL
16 Aug 1985	Charles Rohde

7. APPROVAL FOR RETURN TO SERVICE

Pursuant to the authority given persons specified below, the unit identified in item 4 was inspected in the manner prescribed by the Administrator of the Federal Aviation Administration and is [X] APPROVED [ ] REJECTED

BY							
		FAA FLT. STANDARDS INSPECTOR		MANUFACTURER	X	INSPECTION AUTHORIZATION	OTHER (Specify)
		FAA DESIGNEE		REPAIR STATION		CANADIAN DEPARTMENT OF TRANSPORT INSPECTOR OF AIRCRAFT	

DATE OF APPROVAL OR REJECTION	CERTIFICATE OR DESIGNATION NO.	SIGNATURE OF AUTHORIZED INDIVIDUAL
16 Aug 1985	540727162	Charles Rohde

FAA Form 337 (7-67) (8320)

FAA AIRCRAFT REGISTRY
CAMERA NO. 2 DATE: 7-21-89

NOTICE

Weight and balance or operating limitation changes shall be entered in the appropriate aircraft record. An alteration must be compatible with all previous alterations to assure continued conformity with the applicable airworthiness requirements.

8. DESCRIPTION OF WORK ACCOMPLISHED *(If more space is required, attach additional sheets. Identify with aircraft nationality and registration mark and date work completed.)*

Installation of Continental IO-470-U previously approved on form 337 dated 21 Aug 1981. This 337 is to approve the installation of Continental IO-470-S in place of the IO-470-U, utilizing PN 62519-2 metering servo
PN 642796A shroud
PN 638154-9 fuel pump
PN 631427A17 distributer valve
PN F198003RA throttle valve
as approved 21 August 81.

This 337 does not cover any aircraft system or components not specifically listed here on, and authorizes deviation on engine dash letter only. Form 337 dated 21 August 1981 authorizes modification of other systems.

END

☐ ADDITIONAL SHEETS ARE ATTACHED

☆U.S. GOVERNMENT PRINTING OFFICE: 1977—771-021/290

FAA AIRCRAFT REGISTRY
CAMERA NO. 5 DATE: 7-12-85

DEPARTMENT OF TRANSPORTATION
FEDERAL AVIATION ADMINISTRATION

MAJOR REPAIR AND ALTERATION
(Airframe, Powerplant, Propeller, or Appliance)

Form Approved
Budget Bureau No. 04-R0601

FOR FAA USE ONLY
OFFICE IDENTIFICATION
NM-FSDO-66

INSTRUCTIONS: Print or type all entries. See FAR 43.9, FAR 43 Appendix B, and AC 43.9-1 (or subsequent revision thereof) for instructions and disposition of this form.

1. AIRCRAFT	MAKE: CESSNA	MODEL: 180 J
	SERIAL NO.: 180 52551	NATIONALITY AND REGISTRATION MARK: N52194
2. OWNER	NAME (As shown on registration certificate): Chuck Whitehead	ADDRESS (As shown on registration certificate): 1337 So. Grand, Spokane, Washington 99202

3. FOR FAA USE ONLY

4. UNIT IDENTIFICATION / 5. TYPE

UNIT	MAKE	MODEL	SERIAL NO.	REPAIR	ALTERATION
AIRFRAME	(As described in item 1 above)			X	
POWERPLANT					
PROPELLER					
APPLIANCE	TYPE / MANUFACTURER				

6. CONFORMITY STATEMENT

A. AGENCY'S NAME AND ADDRESS	B. KIND OF AGENCY	C. CERTIFICATE NO.
Robert A. Compton Don's Aero Service P.O. Box 502 (Hackney Airpark) Athol, Idaho 83801	X U.S. CERTIFICATED MECHANIC FOREIGN CERTIFICATED MECHANIC CERTIFICATED REPAIR STATION MANUFACTURER	A&P 1819478

D. I certify that the repair and/or alteration made to the unit(s) identified in item 4 above and described on the reverse or attachments hereto have been made in accordance with the requirements of Part 43 of the U.S. Federal Aviation Regulations and that the information furnished herein is true and correct to the best of my knowledge.

DATE	SIGNATURE OF AUTHORIZED INDIVIDUAL
5/30/83	Robert A. Compton

7. APPROVAL FOR RETURN TO SERVICE

Pursuant to the authority given persons specified below, the unit identified in item 4 was inspected in the manner prescribed by the Administrator of the Federal Aviation Administration and is [X] APPROVED [ ] REJECTED

BY							
		FAA FLT. STANDARDS INSPECTOR		MANUFACTURER	X	INSPECTION AUTHORIZATION	OTHER (Specify)
		FAA DESIGNEE		REPAIR STATION		CANADIAN DEPARTMENT OF TRANSPORT INSPECTOR OF AIRCRAFT	

DATE OF APPROVAL OR REJECTION	CERTIFICATE OR DESIGNATION NO.	SIGNATURE OF AUTHORIZED INDIVIDUAL
5/30/83	AI 1819478	Robert A. Compton

FAA Form 337 (7-67) ☆ U.S. Government Printing Office 1977—772-646/141 (8320)

FAA AIRCRAFT REGISTRY
CAMERA NO. 5 DATE: 7-12-85

NOTICE

Weight and balance or operating limitation changes shall be entered in the appropriate aircraft record. An alteration must be compatible with all previous alterations to assure continued conformity with the applicable airworthiness requirements.

DESCRIPTION OF WORK ACCOMPLISHED *(If more space is required, attach additional sheets. Identify with aircraft nationality and registration mark and date work completed.)*

Item 1. Repaired lower left bulkhead and skin at station 90 on fuselage below baggage compartment door where left rear float fitting is mounted as per Cessna 180-185 Service Manual D 2000-8-13-RFU-400-3/81, Section 17, Figure 17-4 & 17-5.

— END —

☐ ADDITIONAL SHEETS ARE ATTACHED

FAA AIRCRAFT REGISTRY
CAMERA NO. 5 DATE: 7-12-85

DEPARTMENT OF TRANSPORTATION
FEDERAL AVIATION ADMINISTRATION

MAJOR REPAIR AND ALTERATION
(Airframe, Powerplant, Propeller, or Appliance)

Form Approved
Budget Bureau No. 04-R060.1

FOR FAA USE ONLY

OFFICE IDENTIFICATION
NM-FSDO-66

INSTRUCTIONS: Print or type all entries. See FAR 43.9, FAR 43 Appendix B, and AC 43.9-1 (or subsequent revision thereof) for instructions and disposition of this form.

1. AIRCRAFT	MAKE: Cessna	MODEL: 180 J
	SERIAL NO.: 180 52551	NATIONALITY AND REGISTRATION MARK: N52194
2. OWNER	NAME (As shown on registration certificate): Chuck Whitehead	ADDRESS (As shown on registration certificate): 1337 So. Grand, Spokane, Washington 99202

3. FOR FAA USE ONLY

4. UNIT IDENTIFICATION

UNIT	MAKE	MODEL	SERIAL NO.	5. TYPE: REPAIR	5. TYPE: ALTERATION
AIRFRAME	(As described in item 1 above)				X
POWERPLANT					
PROPELLER					
APPLIANCE	TYPE / MANUFACTURER				

6. CONFORMITY STATEMENT

A. AGENCY'S NAME AND ADDRESS	B. KIND OF AGENCY	C. CERTIFICATE NO.
Don Chessman dba Don's Aero Service P.O. Box 502 (Hackney Airpark) Athol, Idaho 83801	X U.S. CERTIFICATED MECHANIC FOREIGN CERTIFICATED MECHANIC CERTIFICATED REPAIR STATION MANUFACTURER	A&P 1280128

D. I certify that the repair and/or alteration made to the unit(s) identified in item 4 above and described on the reverse or attachments hereto have been made in accordance with the requirements of Part 43 of the U.S. Federal Aviation Regulations and that the information furnished herein is true and correct to the best of my knowledge.

DATE	SIGNATURE OF AUTHORIZED INDIVIDUAL
May 30, 1983	Don Chessman

7. APPROVAL FOR RETURN TO SERVICE

Pursuant to the authority given persons specified below, the unit identified in item 4 was inspected in the manner prescribed by the Administrator of the Federal Aviation Administration and is [X] APPROVED [ ] REJECTED

BY						
	FAA FLT. STANDARDS INSPECTOR	MANUFACTURER	X	INSPECTION AUTHORIZATION	OTHER (Specify)
	FAA DESIGNEE	REPAIR STATION		CANADIAN DEPARTMENT OF TRANSPORT INSPECTOR OF AIRCRAFT	

DATE OF APPROVAL OR REJECTION	CERTIFICATE OR DESIGNATION NO.	SIGNATURE OF AUTHORIZED INDIVIDUAL
5/30/83		Don Chessman

FAA Form 337 (7-67) (8320)

FAA AIRCRAFT REGISTRY
CAMERA NO. 5 DATE: 7-12-85

NOTICE

Weight and balance or operating limitation changes shall be entered in the appropriate aircraft record. An alteration must be compatible with all previous alterations to assure continued conformity with the applicable airworthiness requirements.

8. DESCRIPTION OF WORK ACCOMPLISHED *(If more space is required, attach additional sheets. Identify with aircraft nationality and registration mark and date work completed.)*

Item 1. Installed Flap seals on left and right wings as per Robenson STC No. SA 3272 WE.

- End -

☐ ADDITIONAL SHEETS ARE ATTACHED

☆U.S. GOVERNMENT PRINTING OFFICE: 1977—711-021/344

FAA AIRCRAFT REGISTRY
CAMERA NO. 5 DATE: 7-12-85

DEPARTMENT OF TRANSPORTATION
FEDERAL AVIATION ADMINISTRATION

MAJOR REPAIR AND ALTERATION
(Airframe, Powerplant, Propeller, or Appliance)

Form Approved
Budget Bureau No. 04-R060.1

FOR FAA USE ONLY

OFFICE IDENTIFICATION
NW-GADO-5

INSTRUCTIONS: Print or type all entries. See FAR 43.9, FAR 43 Appendix B, and AC 43.9-1 (or subsequent revision thereof) for instructions and disposition of this form.

1. AIRCRAFT	MAKE: CESSNA	MODEL: 180J
	SERIAL NO. 18052551	NATIONALITY AND REGISTRATION MARK: N52194
2. OWNER	NAME (As shown on registration certificate): WHITEHEAD INSURANCE AGENCY	ADDRESS (As shown on registration certificate): 1332 S. GRAND SPOKANE, WA 99202

3. FOR FAA USE ONLY

4. UNIT IDENTIFICATION / **5. TYPE**

UNIT	MAKE	MODEL	SERIAL NO.	REPAIR	ALTERATION
AIRFRAME	◆◆◆◆◆◆◆◆◆◆◆◆◆◆◆◆◆◆◆◆ (As described in item 1 above) ◆◆◆◆◆◆◆◆◆◆◆◆◆◆◆◆◆◆◆◆				X
POWERPLANT					
PROPELLER					
APPLIANCE	TYPE / MANUFACTURER				

6. CONFORMITY STATEMENT

A. AGENCY'S NAME AND ADDRESS	B. KIND OF AGENCY	C. CERTIFICATE NO.
DAVID M. LEHMAN FLYING L RANCH NINE MILE FALLS, WA 99026	X U.S. CERTIFICATED MECHANIC FOREIGN CERTIFICATED MECHANIC CERTIFICATED REPAIR STATION MANUFACTURER	1922165

D. I certify that the repair and/or alteration made to the unit(s) identified in item 4 above and described on the reverse or attachments hereto have been made in accordance with the requirements of Part 43 of the U.S. Federal Aviation Regulations and that the information furnished herein is true and correct to the best of my knowledge.

DATE: OCTOBER 9, 1981

SIGNATURE OF AUTHORIZED INDIVIDUAL: DAVID M. LEHMAN

7. APPROVAL FOR RETURN TO SERVICE

Pursuant to the authority given persons specified below, the unit identified in item 4 was inspected in the manner prescribed by the Administrator of the Federal Aviation Administration and is [X] APPROVED [ ] REJECTED

BY							OTHER (Specify)
		FAA FLT. STANDARDS INSPECTOR		MANUFACTURER	X	INSPECTION AUTHORIZATION	
		FAA DESIGNEE		REPAIR STATION		CANADIAN DEPARTMENT OF TRANSPORT INSPECTOR OF AIRCRAFT	

DATE OF APPROVAL OR REJECTION	CERTIFICATE OR DESIGNATION NO.	SIGNATURE OF AUTHORIZED INDIVIDUAL
OCTOBER 9, 1981	1922165	DAVID M. LEHMAN

FAA Form 337 (7-67) (8320)

FAA AIRCRAFT REGISTRY
CAMERA NO. 5 DATE: 7-12-85

NOTICE

Weight and balance or operating limitation changes shall be entered in the appropriate aircraft record. An alteration must be compatible with all previ alterations to assure continued conformity with the applicable airworthiness requirements.

8. DESCRIPTION OF WORK ACCOMPLISHED *(If more space is required, attach additional sheets. Identify with aircraft nationality and registration mark and date work completed.)*

1. REMOVED LEFT & RIGHT MLG ASSEMBLIES.
2. REMOVED TAIL WHEEL ASSEMBLY.
3. INSTALLED AQUA MODEL 180-85 FLOATS IN ACCORDANCE WITH STC SA349CE
4. REVISED WT. & BAL. IN ACFT. RECORDS.

THE END

☐ ADDITIONAL SHEETS ARE ATTACHED

☆U.S. GOVERNMENT PRINTING OFFICE: 1977—771-021/290

FAA AIRCRAFT REGISTRY
CAMERA NO. 5 DATE: 7-12-85

DEPARTMENT OF TRANSPORTATION
FEDERAL AVIATION ADMINISTRATION

MAJOR REPAIR AND ALTERATION
(Airframe, Powerplant, Propeller, or Appliance)

Form Approved
Budget Bureau No. 04-R060.1

FOR FAA USE ONLY
OFFICE IDENTIFICATION
ANI-GADO-5

INSTRUCTIONS. Print or type all entries. See FAR 43.9, FAR 43 Appendix B, and AC 43.9-1 (or subsequent revision thereof) for instructions and disposition of this form.

1. AIRCRAFT	MAKE: Cessna	MODEL: 180J
	SERIAL NO.: 180-52551	NATIONALITY AND REGISTRATION MARK: N52194
2. OWNER	NAME (As shown on registration certificate): Whitehead Insurance Agency	ADDRESS (As shown on registration certificate): 1337 S. Grand, Spokane, WA 99202

3. FOR FAA USE ONLY

The alteration identified herein complies with applicable airworthiness requirements and is approved only for the above described aircraft subject to conformity inspection by a person authorized in FAR 43.7.

Date 8-21-81 [signature]
G/A Maintenance Inspector
NW-GADO 5

4. UNIT IDENTIFICATION

UNIT	MAKE	MODEL	SERIAL NO.	5. TYPE REPAIR	ALTERATION
AIRFRAME	(As described in item 1 above)				X
POWERPLANT					
PROPELLER					
APPLIANCE	TYPE				
	MANUFACTURER				

6. CONFORMITY STATEMENT

A. AGENCY'S NAME AND ADDRESS	B. KIND OF AGENCY	C. CERTIFICATE NO.
Don Chessman C/O Empire Airways P.O. Box 26 Hayden Lake, ID 83835	X U.S. CERTIFICATED MECHANIC FOREIGN CERTIFICATED MECHANIC CERTIFICATED REPAIR STATION MANUFACTURER	A & P 1280128

D. I certify that the repair and/or alteration made to the unit(s) identified in item 4 above and described on the reverse or attachments hereto have been made in accordance with the requirements of Part 43 of the U.S. Federal Aviation Regulations and that the information furnished herein is true and correct to the best of my knowledge.

DATE	SIGNATURE OF AUTHORIZED INDIVIDUAL
August 21, 1981	Don Chessman Don Chessman

7. APPROVAL FOR RETURN TO SERVICE

Pursuant to the authority given persons specified below, the unit identified in item 4 was inspected in the manner prescribed by the Administrator of the Federal Aviation Administration and is ☒ APPROVED ☐ REJECTED

BY							
		FAA FLT. STANDARDS INSPECTOR		MANUFACTURER	X	INSPECTION AUTHORIZATION	OTHER (Specify)
		FAA DESIGNEE		REPAIR STATION		CANADIAN DEPARTMENT OF TRANSPORT INSPECTOR OF AIRCRAFT	

DATE OF APPROVAL OR REJECTION	CERTIFICATE OR DESIGNATION NO.	SIGNATURE OF AUTHORIZED INDIVIDUAL
August 21, 1981	A & P1280128	Don Chessman Don Chessman

FAA Form 337 (7-67) ☆ U.S. Government Printing Office 1977—772-646/141 (8320)

FAA AIRCRAFT REGISTRY
CAMERA NO. 5 DATE: 7-12-85

NOTICE

Weight and balance or operating limitation changes shall be entered in the appropriate aircraft record. An alteration must be compatible with all previous alterations to assure continued conformity with the applicable airworthiness requirements.

8. DESCRIPTION OF WORK ACCOMPLISHED *(If more space is required, attach additional sheets. Identify with aircraft nationality and registration mark and date work completed.)*

Item 1. Removed Continental Engine O-470S, serial no. 462115 and McCauley Propeller Model 2A34C203 and installed Continental Engine IO-470-U, serial no. 118117-7-4-R and McCauley Propeller Model D2A34C49-N.

Item 2. Removed rear cross over tube from engine mount and welded 5" forward to L & R longerons to clear space for injection carburetor.

Item 3. Made a carburetor air extension 5" long attached to bottom of injector carb and to top of existing carb air box. Removed carb heat duct and adapter on exhaust stack left side #2 cylinder. Installed 1/16" mesh screen and clamp on carb heat box and replacarded alternate air on carb heat control on cabin control panel.

Item 4. Made a new holding block and bracket for throttle and mixture control cables mounted on rear of oil pump.

Item 5. Installed new Elect fuel pump on fire wall as per Cessna 185 parts and Maintenance Manual. This includes wiring, switch, circuit breaker, cold air blast tube and pump cover, and throttle control microswitch and cam as per Cessna Drawing 0700092 in Service Manual. (See enclosed drawing).

Item 6. Manufactured 2 1½" duct attach tubes on left top of baffel out of .040 2024-T3 aluminum and welded. Used original baffels from O-470-S engine on IO-4700 part nos. are the same. Ducts are used to cool engine driven fuel pump.

Item 7. Removed Cessna 180J fuel system lines. Installed Cessna 185 fuel system as per figure 104 in illustrated parts catalog. Fuel sustem insulation pressure tested and operational check made with no defects noted.

Item 8. Installed Multi-Dual EGT and cylinder head temperature system, probes and gauge as per factory installation and system manufacturers instructions.

All work was accomplised using good practice and workmanship as per FAR Part 43-13 and Cessna 185 Service and Maintenance manual fuel system with factory approved and self manufactured parts as necessary and listed. All limitations and added equipment are revised in equipment list and the flight manual. No noted change in empty weight or C.G.

Test Flight Accomplished/Everything Normal

ADDITIONAL SHEETS ARE ATTACHED

Signed Chuck Whitehead

Chuck Whitehead/PILOT
C1384078

FAA AIRCRAFT REGISTRY
CAMERA NO. 5 DATE: 7-12-85

Aircraft Make & Model: Cessna 180J

Serial No.: 180-52551 Nationality and Registration Mark: N52194

Owner Name and Address: Whitehead Insurance Agency
1337 S. Grand
Spokane, WA 99202

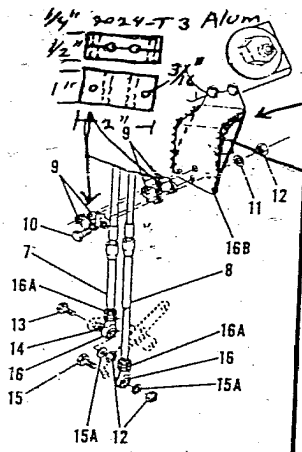

THROTTLE & MIXTURE CONTROLS

Item 4

3/16" 2024-T3 Alum

Alum welded gussett

This replaces exhisting bracket because closer to firewall

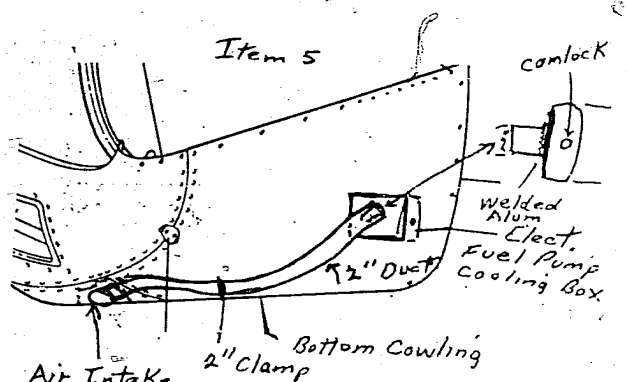

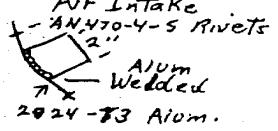

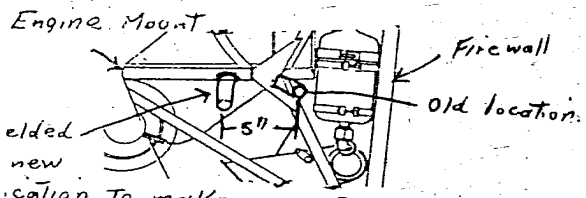

elded new cation To make room for vet injector carboraton

Item 2

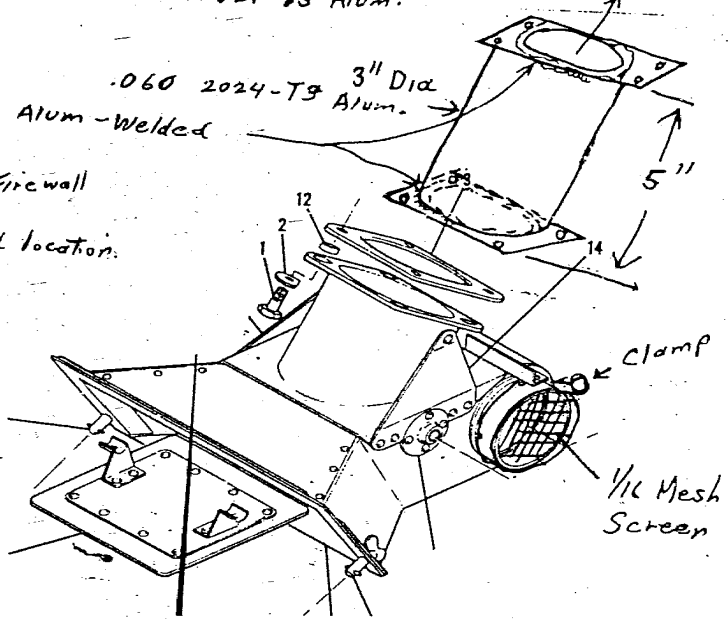

Item 3

FAA AIRCRAFT REGISTRY
CAMERA NO. 5 DATE: 7-12-85

FAA AIRCRAFT REGISTRY
CAMERA NO. 5 DATE: 7-12-85

Form Approved
Budget Bureau No. 04-R0058

DEPARTMENT OF TRANSPORTATION
FEDERAL AVIATION ADMINISTRATION

APPLICATION FOR AIRWORTHINESS CERTIFICATE

INSTRUCTIONS—Print or type. Do not write in shaded areas; these are for FAA use only. Submit original only to an authorized FAA Representative. If additional space is required, use an attachment. For special flight permits complete Sections II and VI or VII as applicable.

I. AIRCRAFT DESCRIPTION

1. REGISTRATION MARK: N52194	2. AIRCRAFT BUILDER'S NAME (make): Cessna	3. AIRCRAFT MODEL DESIGNATION: 180J	4. YR. MFG.: 1975
5. AIRCRAFT SERIAL NO.: 18052551	6. ENGINE BUILDER'S NAME (make): Continental	7. ENGINE MODEL DESIGNATION: 0-470-S	FAA CODING: 2 0 7 2 6 2 2 / 1 7 0 2 6
8. NUMBER OF ENGINES: One	9. PROPELLER BUILDER'S NAME (make): McCauley	10. PROPELLER MODEL DESIGNATION: 2A34C203/90DCA-2	11. AIRCRAFT IS: [ ] IMPORT

II. CERTIFICATION REQUESTED

APPLICATION IS HEREBY MADE FOR: (Check applicable items)

A 1 [X] STANDARD AIRWORTHINESS CERT. (Indicate category) [X] NORMAL [ ] UTILITY [ ] AEROBATIC [ ] TRANSPORT [ ] GLIDER [ ] BALLOON

B SPECIAL AIRWORTHINESS CERTIFICATE (Check appropriate items)

- 2 LIMITED
- 5 PROVISIONAL (Indicate class)
  - 1 CLASS I
  - 2 CLASS II
- 3 RESTRICTED (Indicate operation(s) to be conducted)
  - 1 AGRICULTURE & PEST CONTROL; 2 AERIAL SURVEYING; 3 AERIAL ADVERTISING
  - 4 FOREST (Wild life conservation); 5 PATROLLING; 6 WEATHER CONTROL
  - 0 OTHER (Specify)
- 4 EXPERIMENTAL (Indicate operation(s) to be conducted)
  - 1 RESEARCH AND DEVELOPMENT; 2 AMATEUR BUILT; 3 EXHIBITION
  - 4 RACING; 5 CREW TRAINING; 6 MKT. SURVEY
  - 0 TO SHOW COMPLIANCE WITH FAR
- 8 SPECIAL FLIGHT PERMIT (Indicate operation to be conducted then complete Section VI or VII as applicable on reverse side)
  - 1 FERRY FLIGHT FOR REPAIRS, ALTERATIONS, MAINTENANCE OR STORAGE
  - 2 EVACUATE FROM AREA OF IMPENDING DANGER
  - 3 OPERATION IN EXCESS OF MAX. CERTIFICATED TAKE OFF WEIGHT
  - 4 DELIVERING OR EXPORT; 5 PRODUCTION FLIGHT TESTING

C 6 MULTIPLE AIRWORTHINESS CERTIFICATE (Check appropriate Restricted Operation and Standard or Limited as applicable above)

III. OWNER'S CERTIFICATION

A. REGISTERED OWNER (As shown on Certificate of Aircraft Registration) — IF DEALER, CHECK HERE → [ ]

NAME: Cessna Aircraft Company
ADDRESS: 5800 East Pawnee Road, Wichita, Kansas 67201

B. AIRCRAFT CERTIFICATION BASIS (Check applicable blocks and complete items as indicated)

[X] AIRCRAFT SPECIFICATION OR TYPE CERTIFICATION DATA SHEET (Give No. and Revision No.): 5A6 Rev. 48
[X] AIRWORTHINESS DIRECTIVES (Check if all applicable AD's complied with and give latest AD No.): 75-01
[ ] AIRCRAFT LISTING (Give page No(s).)
[ ] SUPPLEMENTAL TYPE CERTIFICATE (List number of each STC incorporated)

C. AIRCRAFT OPERATION AND MAINTENANCE RECORDS

[X] CHECK IF RECORDS IN COMPLIANCE WITH FAR 91.173
TOTAL AIRFRAME HOURS— 1.25
3 EXPERIMENTAL ONLY—Enter hours flown since last certificate issued or renewed

D. CERTIFICATION—I hereby certify that I am the owner (or his agent) of the aircraft described above; that the aircraft is registered with the Federal Aviation Administration in accordance with Section 501 of the Federal Aviation Act of 1958, and applicable Federal Aviation Regulations; and that the aircraft has been inspected and is airworthy and eligible for the airworthiness certificate requested.

DATE OF APPLICATION: 1-16-75
NAME AND TITLE (Print or type): Malcolm Harned, Group Vice Pres.
SIGNATURE: Malcolm Harned

IV. INSPECTION AGENCY VERIFICATION

A. THE AIRCRAFT DESCRIBED ABOVE HAS BEEN INSPECTED AND FOUND AIRWORTHY BY: (Complete this section only if FAR 21.183 (d) applies)

2 FAR PART 121 OR 127 CERTIFICATE HOLDER (Give Certificate No.)
3 CERTIFICATED MECHANIC (Give Certificate No.)
6 CERTIFICATED REPAIR STATION (Give Certificate No.)
5 AIRCRAFT MANUFACTURER (Give Name of Firm)

DATE | TITLE | SIGNATURE

V. FAA REPRESENTATIVE CERTIFICATION

(Check ALL applicable blocks) I find that the aircraft described in Section I or VII meets the requirements for: [X] The certification requested, or [ ] Amendment or modification of its current airworthiness certificate. Inspection for a special flight permit under Section VII was conducted by: [ ] FAA Inspector [ ] Certificate holder under [ ] FAR 65, [ ] FAR 121 or 127, or [ ] FAR 145.

DATE: 1-23-75
DISTRICT OFFICE: ICT EMDO 3-0-43
4 DESIGNEE'S SIGNATURE AND NO.: Cessna Aircraft Co., Pawnee Div. Delegation Option Manufacturer, CE-1 — By L. E. Spalding, L. E. Spalding
5 FAA INSPECTOR'S SIGNATURE

FAA Form 8130-6 (7-70)

FAA AIRCRAFT REGISTRY
CAMERA NO. 5 DATE: 7-12-85

Filed by WZB

VI. PRODUCTION FLIGHT TESTING

A. MANUFACTURER

NAME	ADDRESS

B. PRODUCTION BASIS *(Check applicable item)*

- [ ] PRODUCTION CERTIFICATE *(Give production certificate number)*
- [ ] TYPE CERTIFICATE ONLY
- [ ] APPROVED PRODUCTION INSPECTION SYSTEM

C. GIVE QUANTITY OF CERTIFICATES REQUIRED FOR OPERATING NEEDS:

DATE OF APPLICATION	NAME AND TITLE *(Print or type)*	SIGNATURE

VII. SPECIAL FLIGHT PERMIT PURPOSES OTHER THAN PRODUCTION FLIGHT TEST

A. DESCRIPTION OF AIRCRAFT

REGISTERED OWNER	ADDRESS
BUILDER *(Make)*	MODEL
SERIAL NUMBER	REGISTRATION MARK

B. DESCRIPTION OF FLIGHT

FROM	TO	
VIA	DEPARTURE DATE	DURATION

C. CREW REQUIRED TO OPERATE THE AIRCRAFT AND ITS EQUIPMENT

- [ ] PILOT
- [ ] CO-PILOT
- [ ] NAVIGATOR
- [ ] OTHER *(Specify)*

D. THE AIRCRAFT DOES NOT MEET THE APPLICABLE AIRWORTHINESS REQUIREMENTS AS FOLLOWS:

E. THE FOLLOWING RESTRICTIONS ARE CONSIDERED NECESSARY FOR SAFE OPERATION *(Use attachment if necessary)*

F. CERTIFICATION—I hereby certify that I am the registered owner (or his agent) of the aircraft described above; that the aircraft is registered with the Federal Aviation Administration in accordance with Section 501 of the Federal Aviation Act of 1958, and applicable Federal Aviation Regulations; and that the aircraft has been inspected and is airworthy for the flight described.

DATE	NAME AND TITLE *(Print or type)*	SIGNATURE

VIII. AIRWORTHINESS DOCUMENTATION (FAA use only)

X	A. Operating Limitations and Markings in Compliance with FAR 91.31 as Applicable.		G. Statement of Conformity, FAA Form 317 *(Attach when required)*
	B. Current Operating Limitations Attached		H. Foreign Airworthiness Certification for Import Aircraft *(Attach when required)*
	C. Data, Drawings, Photographs, etc. *(Attach when required)*		I. Previous Airworthiness Certificate Issued in Accordance with FAR _____ CAR _____ *(Original attached)*
X	D. Current Weight and Balance Information Available in Aircraft		
	E. Major Repair and Alteration, FAA 337 *(Attach when required)*	X	J. Current Airworthiness Certificate Issued in Accordance with FAR 21.183 (a) *(Copy attached)*
X	F. This Inspection Recorded in Aircraft Records		

FAA AIRCRAFT REGISTRY
CAMERA NO. 5 DATE: 7-12-85

UNITED STATES OF AMERICA
DEPARTMENT OF TRANSPORTATION—FEDERAL AVIATION ADMINISTRATION

STANDARD AIRWORTHINESS CERTIFICATE

1. NATIONALITY AND REGISTRATION MARKS	2. MANUFACTURER AND MODEL	3. AIRCRAFT SERIAL NUMBER	4. CATEGORY
N52194	Cessna 180J	18052551	Normal

5. AUTHORITY AND BASIS FOR ISSUANCE:
This airworthiness certificate is issued pursuant to the Federal Aviation Act of 1958 and certifies that, as of the date of issuance, the aircraft to which issued was inspected and found to conform to the type certificate therefor, to be in condition for safe operation, and to have been shown to meet the requirements of the applicable comprehensive and detailed airworthiness code as provided by Annex 8 to the Convention on International Civil Aviation, except as noted herein.
Exceptions:

None

6. TERMS AND CONDITIONS:
Unless sooner surrendered, suspended, revoked, or a termination date is otherwise established by the Administrator, this airworthiness certificate is effective so long as the maintenance, preventive maintenance, and alterations are performed in accordance with Parts 43 and 91 of the Federal Aviation Regulations, as appropriate, and the aircraft is registered in the United States.

Cessna Aircraft Co., Pawnee Div.
Operations Inspection Supervisor

DATE OF ISSUANCE	FAA REPRESENTATIVE	DESIGNATION NUMBER
1-23-75	By	PC4

Any alteration, reproduction, or misuse of this Certificate may be punishable by a fine not exceeding $1,000, or imprisonment not exceeding 3 years, or both. THIS CERTIFICATE MUST BE DISPLAYED IN THE AIRCRAFT IN ACCORDANCE WITH APPLICABLE FEDERAL AVIATION REGULATIONS.

FAA Form 8100-2 (7-67) FORMERLY FAA FORM 1362 GPO 1967 -O 270 931

FAA AIRCRAFT REGISTRY
CAMERA NO. 5 DATE: 7-12-85

125

FAA AIRCRAFT REGISTRY
CAMERA NO. 5 DATE: 7-12-85

DEPARTMENT OF TRANSPORTATION
FEDERAL AVIATION ADMINISTRATION

MAJOR REPAIR AND ALTERATION
(Airframe, Powerplant, Propeller, or Appliance)

Form Approved
Budget Bureau No. 04-R060.1

FOR FAA USE ONLY

OFFICE IDENTIFICATION
NW-FSDO-61

RECEIVED

INSTRUCTIONS: Print or type all entries. See FAR 43.9, FAR 43 Appendix B, and AC 43.9-1 (or subsequent revision thereof) for instructions and disposition of this form.

1. AIRCRAFT	MAKE: CESSNA	MODEL: 180 J
	SERIAL NO.: 52551	NATIONALITY AND REGISTRATION MARK: N52194
2. OWNER	NAME (As shown on registration certificate): Ray P. Bade	ADDRESS (As shown on registration certificate): 10829 31st S.W. Seattle, Washington 98146

3. FOR FAA USE ONLY

4. UNIT IDENTIFICATION / 5. TYPE

UNIT	MAKE	MODEL	SERIAL NO.	REPAIR	ALTERATION
AIRFRAME	(As described in item 1 above)				XX
POWERPLANT					
PROPELLER					
APPLIANCE	TYPE / MANUFACTURER				

6. CONFORMITY STATEMENT

A. AGENCY'S NAME AND ADDRESS	B. KIND OF AGENCY	C. CERTIFICATE NO.
AERO-DYNE CORPORATION 300 AIRPORT WAY RENTON, WASHINGTON 98055	U.S. CERTIFICATED MECHANIC FOREIGN CERTIFICATED MECHANIC XX CERTIFICATED REPAIR STATION MANUFACTURER	415-17

D. I certify that the repair and/or alteration made to the unit(s) identified in item 4 above and described on the reverse or attachments hereto have been made in accordance with the requirements of Part 43 of the U.S. Federal Aviation Regulations and that the information furnished herein is true and correct to the best of my knowledge.

DATE: 10/31/77

SIGNATURE OF AUTHORIZED INDIVIDUAL: [signature]

7. APPROVAL FOR RETURN TO SERVICE

Pursuant to the authority given persons specified below, the unit identified in item 4 was inspected in the manner prescribed by the Administrator of the Federal Aviation Administration and is [X] APPROVED [ ] REJECTED

BY							
		FAA FLT. STANDARDS INSPECTOR		MANUFACTURER		INSPECTION AUTHORIZATION	OTHER (Specify)
		FAA DESIGNEE	XX	REPAIR STATION		CANADIAN DEPARTMENT OF TRANSPORT INSPECTOR OF AIRCRAFT	

DATE OF APPROVAL OR REJECTION	CERTIFICATE OR DESIGNATION NO	SIGNATURE OF AUTHORIZED INDIVIDUAL
10/31/77	415-17	[signature]

FAA Form 337 (7-67) (8320)

FAA AIRCRAFT REGISTRY
CAMERA NO. 5 DATE: 7-12-85

NOTICE

Weight and balance or operating limitation changes shall be entered in the appropriate aircraft record. An alteration must be compatible with all previous alterations to assure continued conformity with the applicable airworthiness requirements.

8. DESCRIPTION OF WORK ACCOMPLISHED *(If more space is required, attach additional sheets. Identify with aircraft nationality and registration mark and date work completed.)*

1. Removed EDO 249A-2870 Floats
2. Installed left and right main gear assemblies
3. Installed tail wheel assembly
4. All work done in accordance with Cessna maintenance manual and A/C 43-13-1
5. New weight & balance completed and entered in aircraft logs.

END

RECEIVED
AIR-200-81
JUL 5 8 09 AM

☐ ADDITIONAL SHEETS ARE ATTACHED

★1975-G.P.O.-1703-M/673-800/175

FAA AIRCRAFT REGISTRY
CAMERA NO. 5 DATE: 7-12-85

RECEIVED
JUN 21 1976
NW-FSDO-61

DEPARTMENT OF TRANSPORTATION
FEDERAL AVIATION ADMINISTRATION

MAJOR REPAIR AND ALTERATION
(Airframe, Powerplant, Propeller, or Appliance)

Form Approved
Budget Bureau No. 04-R060.1

FOR FAA USE ONLY

OFFICE IDENTIFICATION
NW-FSDO-61

INSTRUCTIONS: Print or type all entries. See FAR 43.9, FAR 43 Appendix B, and AC 43.9-1 (or subsequent revision thereof) for instructions and disposition of this form.

1. AIRCRAFT	MAKE: Cessna	MODEL: 180J
	SERIAL NO.: 52551	NATIONALITY AND REGISTRATION MARK: N52194
2. OWNER	NAME (As shown on registration certificate): Ray F. Bade	ADDRESS (As shown on registration certificate): 10829 31st S.W. Seattle, Washington 98146

3. FOR FAA USE ONLY

4. UNIT IDENTIFICATION

UNIT	MAKE	MODEL	SERIAL NO.	5. TYPE: REPAIR	5. TYPE: ALTERATION
AIRFRAME	◆◆◆◆◆◆◆◆◆◆◆◆◆◆◆◆◆◆◆◆ (As described in item 1 above) ◆◆◆◆◆◆◆◆◆◆◆◆◆◆◆◆◆◆◆◆				XXX
POWERPLANT					
PROPELLER					
APPLIANCE	TYPE / MANUFACTURER				

6. CONFORMITY STATEMENT

A. AGENCY'S NAME AND ADDRESS	B. KIND OF AGENCY	C. CERTIFICATE NO.
Renton Aviation Inc 840 West Perimter Road Renton, Washington 98055	U.S. CERTIFICATED MECHANIC FOREIGN CERTIFICATED MECHANIC XX CERTIFICATED REPAIR STATION MANUFACTURER	4541

D. I certify that the repair and/or alteration made to the unit(s) identified in item 4 above and described on the reverse or attachments hereto have been made in accordance with the requirements of Part 43 of the U.S. Federal Aviation Regulations and that the information furnished herein is true and correct to the best of my knowledge.

DATE: 6/15/76

SIGNATURE OF AUTHORIZED INDIVIDUAL: Charles L. Roberts

7. APPROVAL FOR RETURN TO SERVICE

Pursuant to the authority given persons specified below, the unit identified in item 4 was inspected in the manner prescribed by the Administrator of the Federal Aviation Administration and is XX APPROVED ☐ REJECTED

BY						
	FAA FLT. STANDARDS INSPECTOR	MANUFACTURER	INSPECTION AUTHORIZATION	OTHER (Specify)
	FAA DESIGNEE	XX REPAIR STATION	CANADIAN DEPARTMENT OF TRANSPORT INSPECTOR OF AIRCRAFT	

DATE OF APPROVAL OR REJECTION	CERTIFICATE OR DESIGNATION NO.	SIGNATURE OF AUTHORIZED INDIVIDUAL
6/15/76	4541	Charles L. Roberts

FAA Form 337 (7-67) (8320)

FAA AIRCRAFT REGISTRY
CAMERA NO. 5 DATE: 7-12-85

NOTICE

Weight and balance or operating limitation changes shall be entered in the appropriate aircraft record. An alteration must be compatible with all previous alterations to assure continued conformity with the applicable airworthiness requirements.

8. DESCRIPTION OF WORK ACCOMPLISHED *(If more space is required, attach additional sheets. Identify with aircraft nationality and registration mark and date work completed.)*

1. Installed EDO 249A-2870 floats as per STC SA246NW.
2. New weight and balance computed and entered in aircraft logs.

**********END**********

☐ ADDITIONAL SHEETS ARE ATTACHED

★1975-G.P.O.-1703-M/673-200/175

FAA AIRCRAFT REGISTRY
CAMERA NO. 5 DATE: 7-12-85

DEPARTMENT OF TRANSPORTATION
FEDERAL AVIATION ADMINISTRATION

MAJOR REPAIR AND ALTERATION
(Airframe, Powerplant, Propeller, or Appliance)

Form Approved
Budget Bureau No. 04-R060 !

FOR FAA USE ONLY

OFFICE IDENTIFICATION
NW-FS09-61

INSTRUCTIONS: Print or type all entries. See FAR 43.9, FAR 43 Appendix B, and AC 43.9-1 (or subsequent revision thereof) for instructions and disposition of this form.

1. AIRCRAFT	MAKE: Cessna	MODEL: 180J
	SERIAL NO.: 18052551	NATIONALITY AND REGISTRATION MARK: USA N52194
2. OWNER	NAME (As shown on registration certificate): Renton Aviation, Inc.	ADDRESS (As shown on registration certificate): 915 W. Perimeter Road Renton, Wa. 98055

3. FOR FAA USE ONLY

4. UNIT IDENTIFICATION / 5. TYPE

UNIT	MAKE	MODEL	SERIAL NO.	REPAIR	ALTERATION
AIRFRAME	(As described in item 1 above)				X
POWERPLANT					
PROPELLER					
APPLIANCE	TYPE / MANUFACTURER				

6. CONFORMITY STATEMENT

A. AGENCY'S NAME AND ADDRESS	B. KIND OF AGENCY	C. CERTIFICATE NO.
American Avionics, Inc. 7001 Perimeter Road Seattle, Wa. 98108	U.S. CERTIFICATED MECHANIC FOREIGN CERTIFICATED MECHANIC X CERTIFICATED REPAIR STATION MANUFACTURER	S04-2 radio 1,11,111

D. I certify that the repair and/or alteration made to the unit(s) identified in item 4 above and described on the reverse or attachments hereto have been made in accordance with the requirements of Part 43 of the U.S. Federal Aviation Regulations and that the information furnished herein is true and correct to the best of my knowledge.

DATE: 10-27-75

SIGNATURE OF AUTHORIZED INDIVIDUAL: A. Reynolds

7. APPROVAL FOR RETURN TO SERVICE

Pursuant to the authority given persons specified below, the unit identified in item 4 was inspected in the manner prescribed by the Administrator of the Federal Aviation Administration and is [X] APPROVED [ ] REJECTED

BY						OTHER (Specify)
		FAA FLT. STANDARDS INSPECTOR		MANUFACTURER		INSPECTION AUTHORIZATION
		FAA DESIGNEE	X	REPAIR STATION		CANADIAN DEPARTMENT OF TRANSPORT INSPECTOR OF AIRCRAFT

DATE OF APPROVAL OR REJECTION	CERTIFICATE OR DESIGNATION NO.	SIGNATURE OF AUTHORIZED INDIVIDUAL
10-27-75	S04-2	A. Reynolds

FAA Form 337 (7-67) (8320)

FAA AIRCRAFT REGISTRY
CAMERA NO. 5 DATE: 7-12-85

NOTICE

Weight and balance or operating limitation changes shall be entered in the appropriate aircraft record. An alteration must be compatible with all previous alterations to assure continued conformity with the applicable airworthiness requirements.

8. DESCRIPTION OF WORK ACCOMPLISHED *(If more space is required, attach additional sheets. Identify with aircraft nationality and registration mark and date work completed.)*

Removed Narco E-llo and installed Cessna 300 nav./com. Installation using existing antennas, breakers and switches. Cessna installation manual for aircraft and avioncis used. AC43-13.1 C.11 sec. 2,3,4&7 C.15 sec. 1-6 and AC43-13.2 C.2 para. 21-22 noted. Power required does not exceed rating of electrical system in aircraft. New weight and balance computed and entries made to aircraft records.

END

RECEIVED
OCT 29 1975
NW-FSDO-61

☐ ADDITIONAL SHEETS ARE ATTACHED

U.S. GOVERNMENT PRINTING OFFICE : 1987 OF—272-085

FAA AIRCRAFT REGISTRY
CAMERA NO. 5 DATE: 7-12-85

DEPARTMENT OF TRANSPORTATION
FEDERAL AVIATION ADMINISTRATION

MAJOR REPAIR AND ALTERATION
(Airframe, Powerplant, Propeller, or Appliance)

Form Approved
Budget Bureau No. 04-R060.1

FOR FAA USE ONLY
OFFICE IDENTIFICATION

INSTRUCTIONS: Print or type all entries. See FAR 43.9, FAR 43 Appendix B, and AC 43.9-1 (or subsequent revision thereof) for instructions and disposition of this form.

1. AIRCRAFT	MAKE CESSNA	MODEL 180J
	SERIAL NO. 18052551	NATIONALITY AND REGISTRATION MARK N52194
2. OWNER	NAME (As shown on registration certificate) RAY F. BADE ALASKA BUYERS SERVICE	ADDRESS (As shown on registration certificate) 10829-31 SE. S.W. SEATTLE WN. 98146

3. FOR FAA USE ONLY

4. UNIT IDENTIFICATION / **5. TYPE**

UNIT	MAKE	MODEL	SERIAL NO.	REPAIR	ALTERATION
AIRFRAME	(As described in item 1 above)				X
POWERPLANT			DECEIVED		
PROPELLER					
APPLIANCE	TYPE / MANUFACTURER				

6. CONFORMITY STATEMENT

A. AGENCY'S NAME AND ADDRESS	B. KIND OF AGENCY	C. CERTIFICATE NO.
CONRAD THOMAS RTE 2 BOX 590C TACOMA WN 98424	X U.S. CERTIFICATED MECHANIC FOREIGN CERTIFICATED MECHANIC CERTIFICATED REPAIR STATION MANUFACTURER	A&P 2003724

D. I certify that the repair and/or alteration made to the unit(s) identified in item 4 above and described on the reverse or attachments hereto have been made in accordance with the requirements of Part 43 of the U.S. Federal Aviation Regulations and that the information furnished herein is true and correct to the best of my knowledge.

DATE 7/8/75 — SIGNATURE OF AUTHORIZED INDIVIDUAL [signature]

7. APPROVAL FOR RETURN TO SERVICE

Pursuant to the authority given persons specified below, the unit identified in item 4 was inspected in the manner prescribed by the Administrator of the Federal Aviation Administration and is ☒ APPROVED ☐ REJECTED

BY						
	FAA FLT. STANDARDS INSPECTOR		MANUFACTURER	X	INSPECTION AUTHORIZATION	OTHER (Specify)
	FAA DESIGNEE		REPAIR STATION		CANADIAN DEPARTMENT OF TRANSPORT INSPECTOR OF AIRCRAFT	

DATE OF APPROVAL OR REJECTION	CERTIFICATE OR DESIGNATION NO.	SIGNATURE OF AUTHORIZED INDIVIDUAL
7/8/75	1978826	[signature]

FAA Form 337 (7-67) (8320)

FAA AIRCRAFT REGISTRY
CAMERA NO. 5 DATE: 7-12-85

NOTICE

Weight and balance or operating limitation changes shall be entered in the appropriate aircraft record. An alteration must be compatible with all previous alterations to assure continued conformity with the applicable airworthiness requirements.

8. DESCRIPTION OF WORK ACCOMPLISHED *(If more space is required, attach additional sheets. Identify with aircraft nationality and registration mark and date work completed.)*

1) REMOVE BOTH MAIN GEARS & TAIL WHEEL

2) INSTALLED SERVICABLE EDO FLOATS MODEL 249A 2870's PER STC NUMBER SA1-622

3) NEW WEIGHT & BALANCE COMPUTED AND ATTACHED TO WEIGHT & BALANCE PACKAGE.

NEW EMPTY WEIGHT = 1995.6
NEW EMPTY WEIGHT C.G. = 39.45
NEW USEFUL LOAD = 804.4

END

RECEIVED
JUL 18 1975
NW-FSDO-61

☐ ADDITIONAL SHEETS ARE ATTACHED

C FAA AC 73-6157

FAA AIRCRAFT REGISTRY
CAMERA NO. 5 DATE: 7-12-85

DEPARTMENT OF TRANSPORTATION
FEDERAL AVIATION ADMINISTRATION

MAJOR REPAIR AND ALTERATION
(Airframe, Powerplant, Propeller, or Appliance)

Form Approved
Budget Bureau No. 04-R060.1

FOR FAA USE ONLY

OFFICE IDENTIFICATION
NW-FSDO-67

INSTRUCTIONS: Print or type all entries. See FAR 43.9, FAR 43 Appendix B, and AC 43.9-1 (or subsequent revision thereof) for instructions and disposition of this form.

RECEIVED

1. AIRCRAFT	MAKE: Cessna	MODEL: 180J
	SERIAL NO.: 18052551	NATIONALITY AND REGISTRATION MARK: USA N52194
2. OWNER	NAME (As shown on registration certificate): Renton Aviation Inc.	ADDRESS (As shown on registration certificate): 915 W. Perimeter Road Seattle, Wa., 98055

3. FOR FAA USE ONLY

4. UNIT IDENTIFICATION / 5. TYPE

UNIT	MAKE	MODEL	SERIAL NO.	REPAIR	ALTERATION
AIRFRAME	(As described in item 1 above)				X
POWERPLANT					
PROPELLER					
APPLIANCE	TYPE / MANUFACTURER				

6. CONFORMITY STATEMENT

A. AGENCY'S NAME AND ADDRESS	B. KIND OF AGENCY	C. CERTIFICATE NO.
Tower Avionics Center Inc. 6860 Perimeter Road Seattle, Wa. 98108	U.S. CERTIFICATED MECHANIC FOREIGN CERTIFICATED MECHANIC X CERTIFICATED REPAIR STATION MANUFACTURER	S04-2 radio 1,11,111

D. I certify that the repair and/or alteration made to the unit(s) identified in item 4 above and described on the reverse or attachments hereto have been made in accordance with the requirements of Part 43 of the U.S. Federal Aviation Regulations and that the information furnished herein is true and correct to the best of my knowledge.

DATE	SIGNATURE OF AUTHORIZED INDIVIDUAL
5-1-75	A. Reynolds

7. APPROVAL FOR RETURN TO SERVICE

Pursuant to the authority given persons specified below, the unit identified in item 4 was inspected in the manner prescribed by the Administrator of the Federal Aviation Administration and is [X] APPROVED [ ] REJECTED

BY						
	FAA FLT. STANDARDS INSPECTOR		MANUFACTURER		INSPECTION AUTHORIZATION	OTHER (Specify)
	FAA DESIGNEE	X	REPAIR STATION		CANADIAN DEPARTMENT OF TRANSPORT INSPECTOR OF AIRCRAFT	

DATE OF APPROVAL OR REJECTION	CERTIFICATE OR DESIGNATION NO.	SIGNATURE OF AUTHORIZED INDIVIDUAL
5-1-75	S04-2	A. Reynolds

FAA Form 337 (7-67) (8320)

FAA AIRCRAFT REGISTRY
CAMERA NO. 5 DATE: 7-12-85

NOTICE

Weight and balance or operating limitation changes shall be entered in the appropriate aircraft record. An alteration must be compatible with all previous alterations to assure continued conformity with the applicable airworthiness requirements.

8. DESCRIPTION OF WORK ACCOMPLISHED *(If more space is required, attach additional sheets. Identify with aircraft nationality and registration mark and date work completed.)*

Installed King KR86 adf system, speaker audio routed through existing Narco E-110 nav/com unit. Loop antenna top mounted for possible use as float plane operation. King radio installation manual for KR86 and Cessna electronic installation manual referenced. AC43-13.1 c.11 sec. 2,3,4,7 c.15 sec. 1-6 and AC43-13.2 C.2 para. 21-22 and c.3 noted. New weight and balance computed. No log book with aircraft.

#####END#####

RECEIVED
MAY 19 1975
NW-FSDO-61

☐ ADDITIONAL SHEETS ARE ATTACHED

U.S. GOVERNMENT PRINTING OFFICE : 1967 OF—272-085